CATALOG NO. 62

WAWhitney

METALWORKING MACHINES AND TOOLS

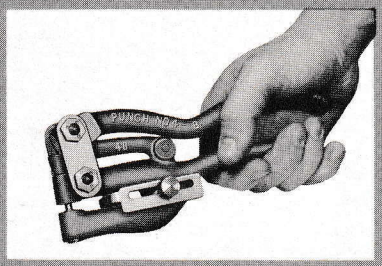

***IRON-MAN* hand-operated punches and shears**

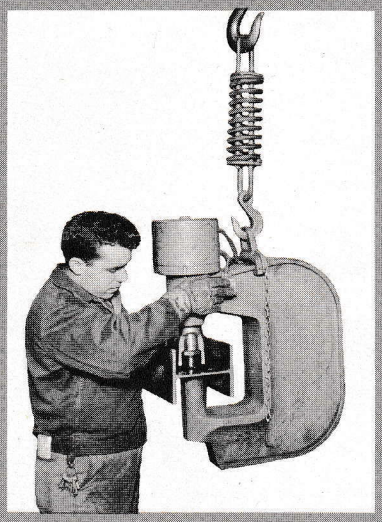

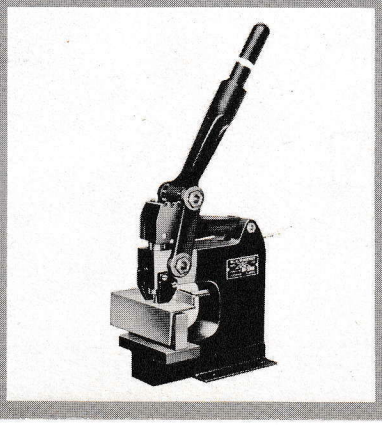

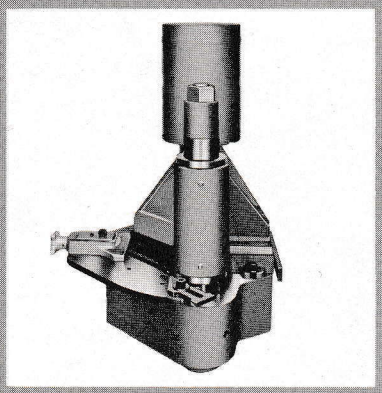

***HYDRAMIC* hydraulically powered presses and shears**

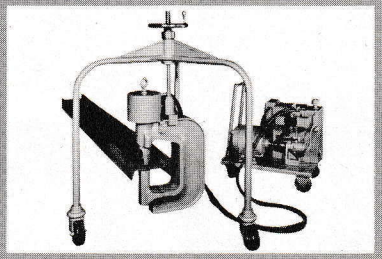

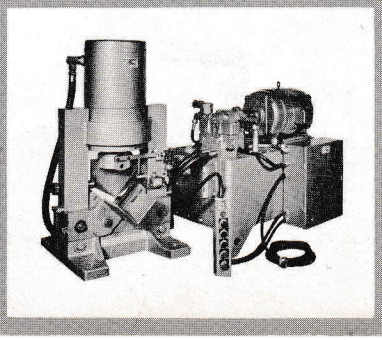

WAWhitney Mfg. Co.
636 Race Street
Rockford, Illinois

COVER

PUNCHING

SHEARING

COPING

NOTCHING

BENDING

SQUEEZING

RIVETING

THE ORIGINAL

WAWhitney Metalworking Equipment . . . Since 1907

CONTENTS **PAGE**

Section 1—Hand-Operated Tools . . . . . 1 - 9

Portable Lever Punches . . . . . 1 - 6

Cor•Shear for corrugated sheets 7

Chicago steel slitting shear 7

Bench-mounted lever presses — 10-ton capacity . . . . . 8 - 9

Section 2—Hydraulically Powered Hydramic Presses and Shears . . . . . 10 - 32

Portable Flange Punches . . . . . 12 - 13

Portable Web Punches . . . . . 14 - 15

Portable Notching Presses 16

Portable Riveting Presses 17

Tripods and Cradles for Portable Presses 18

Special Presses 19

Stationary Multiple-Purpose Presses . . . . . 20 - 23

Shearing and Forming Presses . . . . . 24 - 27

Cope-Notch-Bend Press . . . . . 28 - 29

Combination Press Hookups . . . . . 30 - 32

Section 3—Punches, Dies and Accessories (with prices) 33 - 48

Section 4—Estwing Patent Hammers 49

Section 5—Parts For Hand-Operated Tools . . . . . 50 - 51

Section 6—Useful Engineering Tables 52

WAWHITNEY MFG. CO., 636 Race St., Rockford, Illinois • Phone 964-6775 • Direct Western Union Wire Service (FCL)

INSIDE FRONT COVER

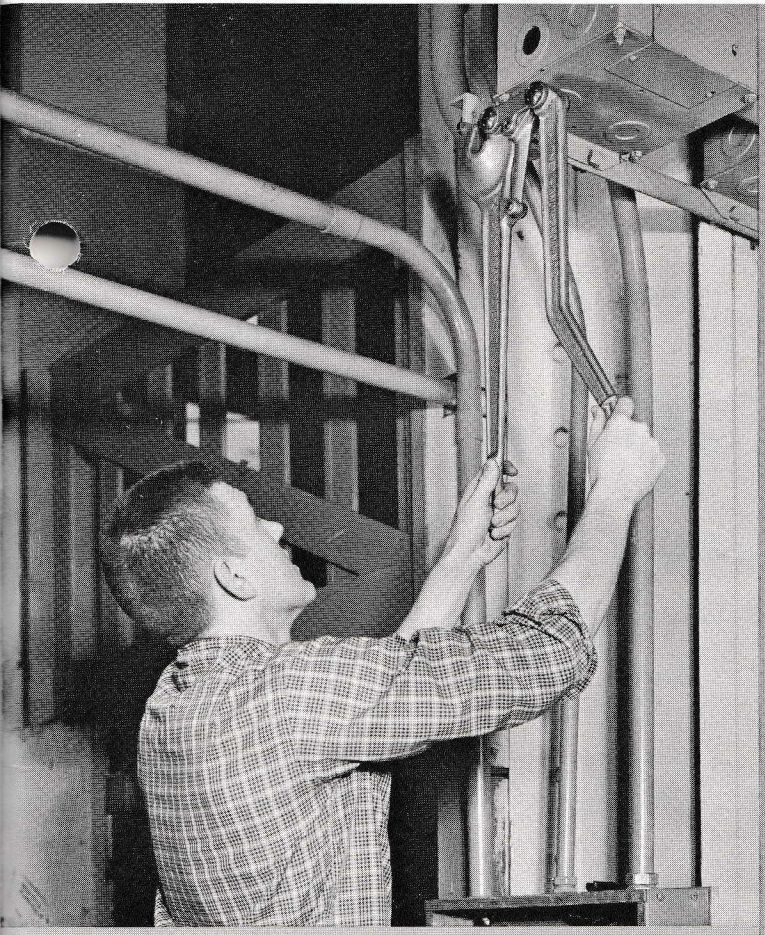

PUNCHING AND FORMING

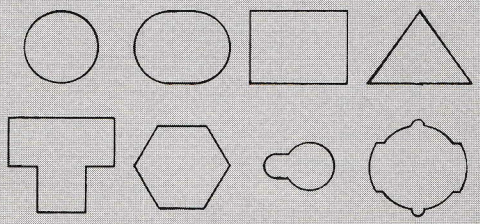

CLIPPING AND INDENTING

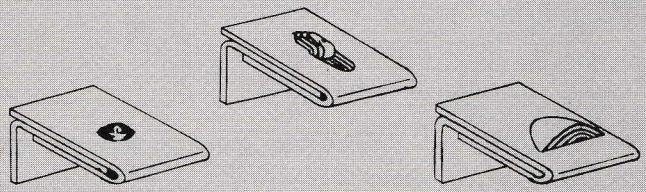

NOTCHING AND COPING

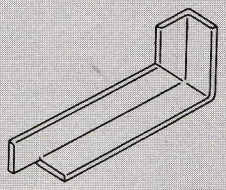

SHEARING

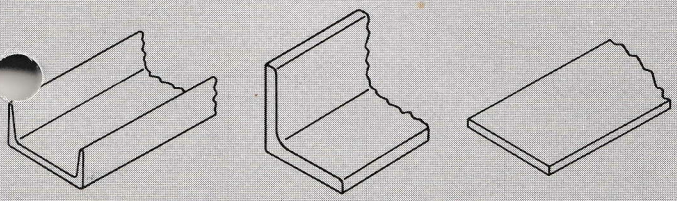

Section 1

Hand-Operated Tools

Portable and Bench-Mounted

WAWhitney Iron-Man lever punches are the original "Whitney" punches which have been the favorite of good craftsmen since 1907. They provide powerful capacity, simple but rugged construction, and fine balance. The major parts of these tools are drop-forged of high-grade alloy steel. The wearing parts are carefully heat-treated. WAWhitney punches and dies are made of high-quality tool steel tempered and heat-treated with modern equipment and techniques in our own plant.

All WAWhitney Iron-Man lever punches are *guaranteed* against defects in material and workmanship.

Call us to serve your needs

AREA CODE 815 DIAL 964-6775

Raymond T. Stymacks
Sales Manager

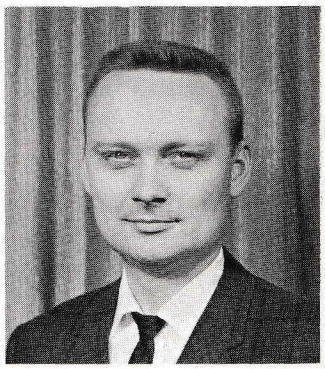

Ted F. Brolund
Chief Engineer

James O. Wessman
Adv. Manager

THE ORIGINAL

WAWhitney • Iron-Man Portable Punches

NO. 4B PUNCH . . . the tinner's friend

Capacity — 1.2 tons
Max. dia. — 5/16″ (18-ga mild steel)
Max. thickness — 14-ga mild steel (3/16″ dia. hole)

Length — 8-1/2″

Throat depth — 2″

Weight — 2-1/2 lb

Tooling: No. 4B for round, square, oval, and rectangular holes — see pages 34 and 35; button punches and dies — page 34; special shapes made to order.

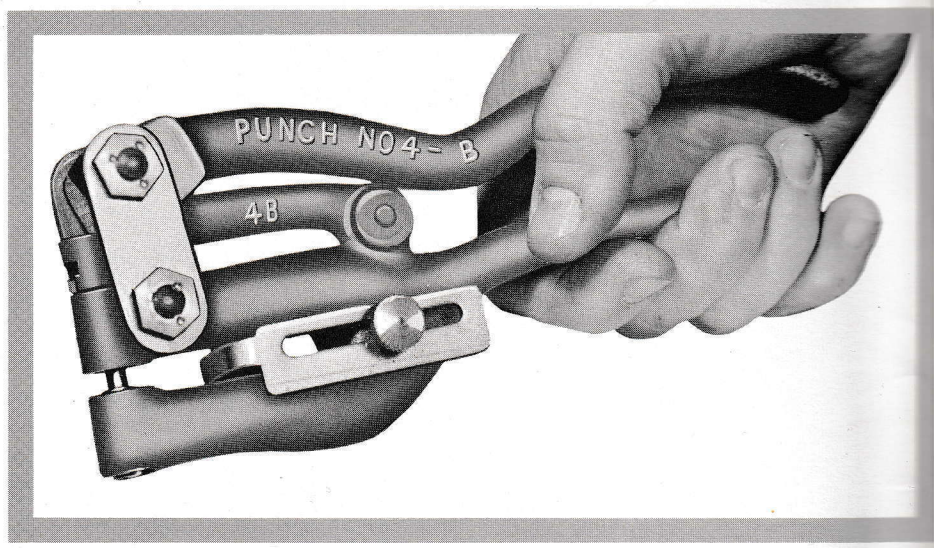

The WAWhitney No. 4B punch is as important to a tinner as the hammer is to a carpenter. This highly popular model is lightweight and efficient, durably built and compact, with the power and capacity to meet the majority of sheet metal requirements. Major parts are made of drop forgings with wearing parts heat-treated. There are no stampings to break or wear out. A side gage to adjust the depth of throat is standard.

The 4B punch is available in a metal box with seven sets of punches and dies as illustrated below at the left — or in a corrugated carton with a choice of any three punch and die sets as listed on page 34 (if no choice is made, one each 3/16″, 7/32″, and 1/4″ punches and dies are supplied). A die adjusting key is provided with each tool.

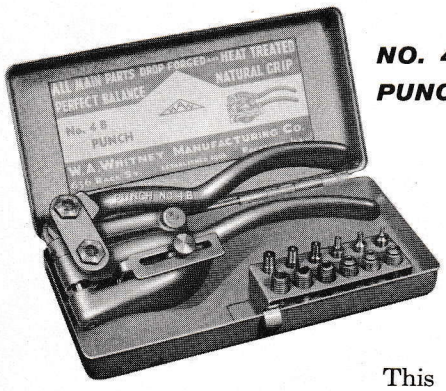

NO. 4B PUNCH SET

This complete punch kit is highly recommended for use in the shop or on the job. The heavy-gage enamel finish steel box with hinged cover holds the punch firmly in place and has a metal rack to hold six extra punches and dies. Weight of kit 4-1/4 lb.

The kit is shipped complete with your choice of any seven punch and die sets listed on page 34. If no choice is indicated, the following sizes are supplied: 3/32″, 1/8″, 5/32″, 3/16″, 7/32″, 1/4″, and 9/32″.

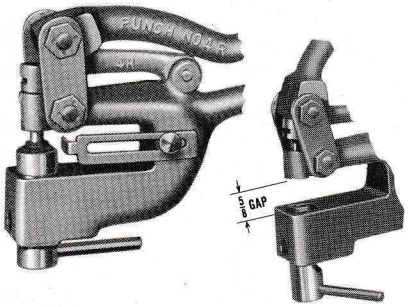

NO. 4R PUNCH

This punch basically is the same as the No. 4B, except that it has an auxiliary lever mechanism to drop the die down so that the jaw will clear a 1/2″ flange. Less than a quarter turn on the lever instantly adjusts the die position.

NO. 45 PUNCH

This tool is identical to the No. 4B punch except that it uses a No. 5 punch and die — see page 34.

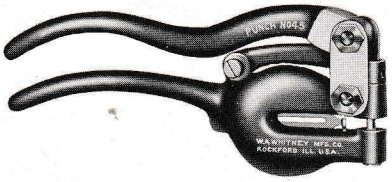

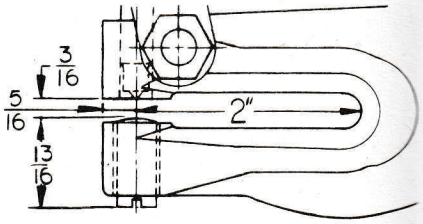

4B & 45 JAW DIMENSIONS

NO. 4V VISE

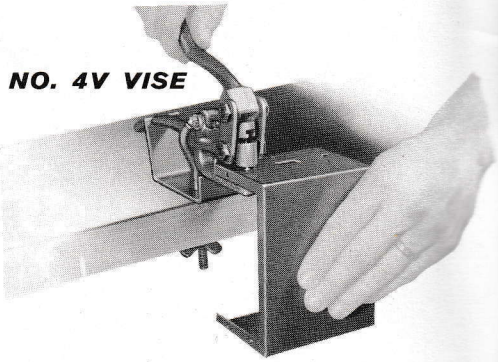

This sturdy, inexpensive vise converts No. 4B and No. 45 punches to convenient, easy-to-operate bench-type tools. Simply drill one hole in the bench, and fasten securely by wing nut.

NO. 8B PUNCH . . . *for heavy-duty sheet metal work*

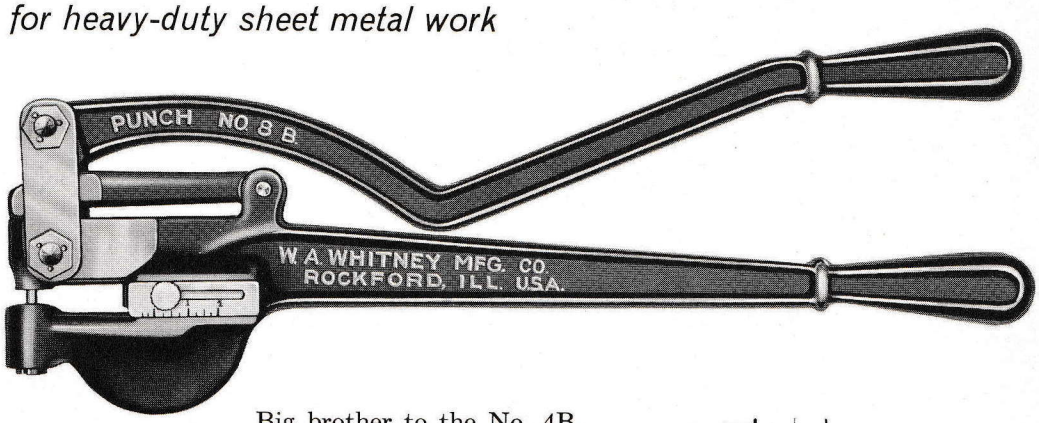

Capacity — 2.4 tons
Max. dia.—7/16″ (16-ga mild steel)
Max. thickness — 1/8″ mild steel (1/4″ dia. hole)

Length — 18-1/2″

Throat depth — 2″

Weight — 7-1/2 lb

Tooling: No. 7 punches with No. 8B dies for round, square, oval, and rectangular holes — see pages 34 and 35; button punches and dies — page 34; special shapes made to order.

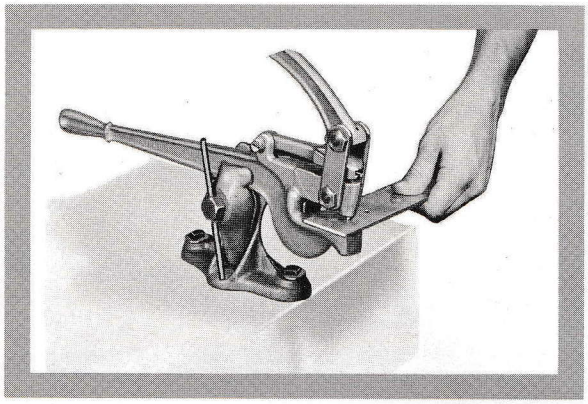

Big brother to the No. 4B, this sturdily built drop-forged No. 8B punch is a heavy-duty tool for on-the-job and in-the-shop sheet metal work. It is equipped with side gage throat depth adjustment and is shipped complete with three punches and dies and die adjusting key. Unless otherwise specified, one each 3/16″, 7/32″, and 1/4″ punches and dies are supplied.

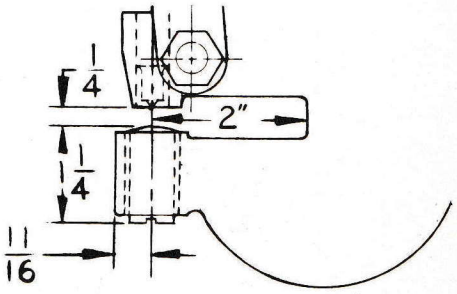

JAW DIMENSIONS

No. 2V Vise — Sturdy malleable iron vise bolts to bench or plank to hold No. 8B punch rigidly for use as a bench press, giving the operator a free hand to hold and locate the workpiece.

NO. 6 PUNCH . . . *for flange and seam work*

Capacity — 2.7 tons
Max. dia. — 11/32″ (12-ga mild steel)
Max. thickness — 1/8″ mild steel (1/4″ dia. hole)

Length — 26-1/2″

Throat depth — 1-7/8″

Weight — 10-1/2 lb

Tooling: No. 2 punches and No. 6 dies for round, square, oval, and rectangular holes — see page 34; special shapes made to order.

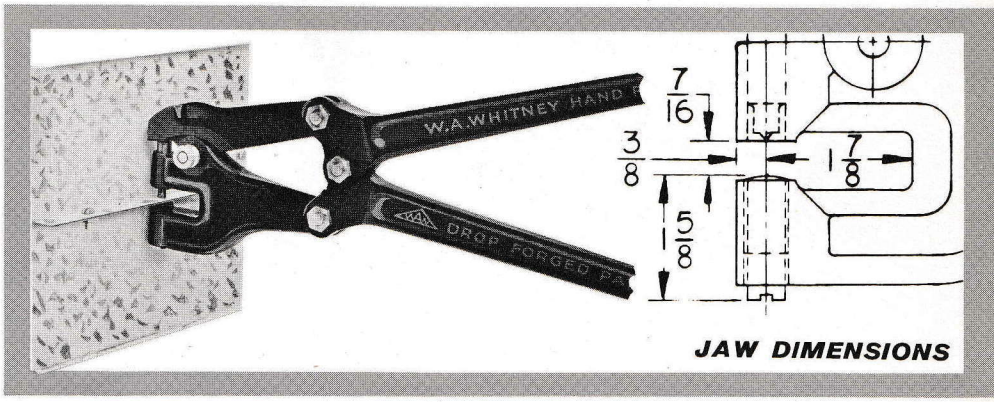

JAW DIMENSIONS

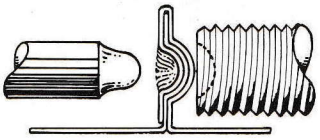

Button punches and dies — Used with No. 4B, No. 8B, No. 6, and No. 2 hand lever punches to fasten three or more thicknesses of metal together without punching a hole or using a rivet. See listing on page 34.

The No. 6 punch is especially adapted to skylight, ventilating, and tank flange work. It punches within 3/8″ of an inside corner of angle iron. The jaw will reach into a space 5-1/4″ wide, and punch will strip where handle cannot be opened to 90°.

This tool is especially adapted for button punching work.

The No. 6 punch is supplied complete with three punches and dies and die adjusting key. Unless otherwise specified, 3/16″, 7/32″, and 1/4″ punches and dies are provided.

THE ORIGINAL

WAWhitney • Iron-Man Portable Punches

NO. 2 PUNCHES . . . *ideal for on-the-job work*

Capacity — 5 tons

Length — 23″

Weights, throat depths, and hole sizes — described elsewhere on this page.

Tooling: For round, square, oval, and rectangular holes — see pages 34 and 35; button punches and dies — page 34; special shapes made to order.

JAW DIMENSIONS

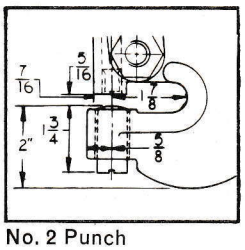

No. 2 Punch

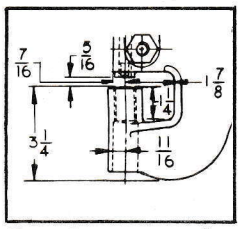

No. 2 Channel Iron Punch

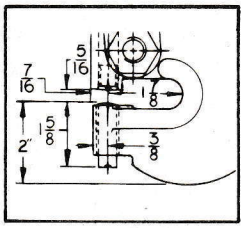

No. 2 Close Corner Punch

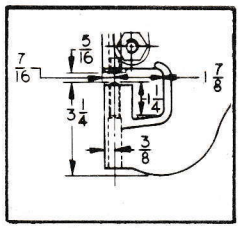

No. 2 Close Corner Channel Iron Punch

STANDARD JAWS

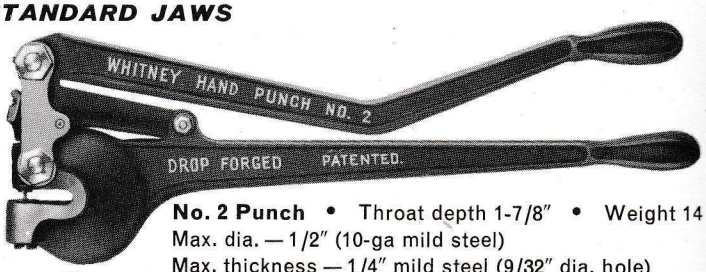

No. 2 Punch • Throat depth 1-7/8″ • Weight 14 lb
Max. dia. — 1/2″ (10-ga mild steel)
Max. thickness — 1/4″ mild steel (9/32″ dia. hole)

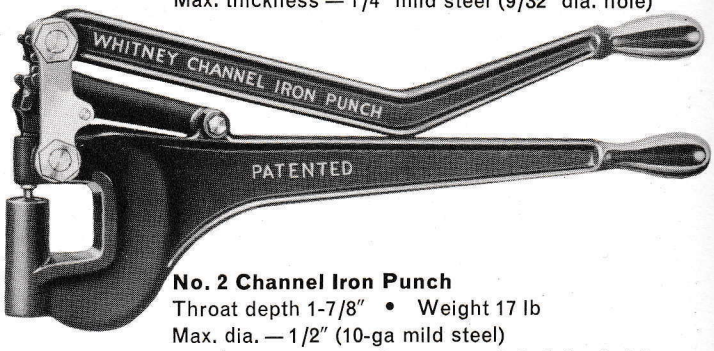

No. 2 Channel Iron Punch
Throat depth 1-7/8″ • Weight 17 lb
Max. dia. — 1/2″ (10-ga mild steel)
Max. thickness — 1/4″ mild steel (9/32″ dia. hole)

CLOSE CORNER JAWS

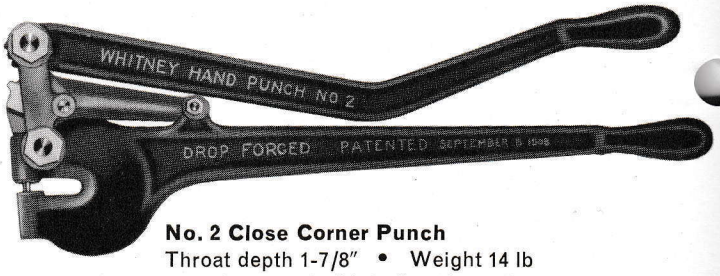

No. 2 Close Corner Punch
Throat depth 1-7/8″ • Weight 14 lb
Max. dia. — 11/32″ (3/16″ mild steel)
Max. thickness — 1/4″ mild steel (9/32″ dia. hole)

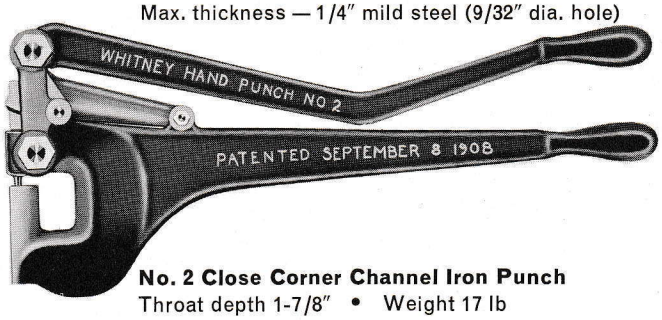

No. 2 Close Corner Channel Iron Punch
Throat depth 1-7/8″ • Weight 17 lb
Max. dia. — 11/32″ (3/16″ mild steel)
Max. thickness — 1/4″ mild steel (9/32″ dia. hole)

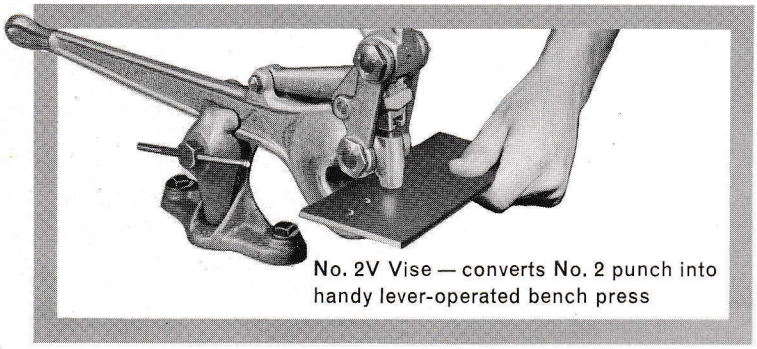

No. 2V Vise — converts No. 2 punch into handy lever-operated bench press

Most powerful tools of their size due to their unique cam action, WAWhitney No. 2 punches have become highly popular for on-the-job use. For example, their light weight minimizes operator fatigue on overhead garage door work.

No. 2 punches are available with four different jaw types as illustrated on this page. Except for the jaws, the punches are identical.

The channel iron punch jaws are especially designed for punching the webs in channel iron. The close corner punch jaws are designed to use a smaller die to permit punching holes within 3/8″ of a corner.

All parts except jaws are interchangeable. The tools are made of drop-forged steel with heat-treated wearing parts. They are supplied complete with one punch and die and die adjusting key. Unless otherwise specified, a 1/4″ punch and die set is provided.

NO. 1 PUNCH . . . *for the heavy-duty jobs*

Capacity — 7.5 tons

Max. dia. — 9/16″ (10-ga mild steel)

Max. thickness — 1/4″ mild steel (3/8″ dia. hole)

Length — 34″ (includes 24″ removable pipe handles)

Throat depth — 2″

Weight — 23 lb

Tooling: No. 1 punch and die sets for round, square, oval, and rectangular holes — see pages 34 and 35; special shapes made to order.

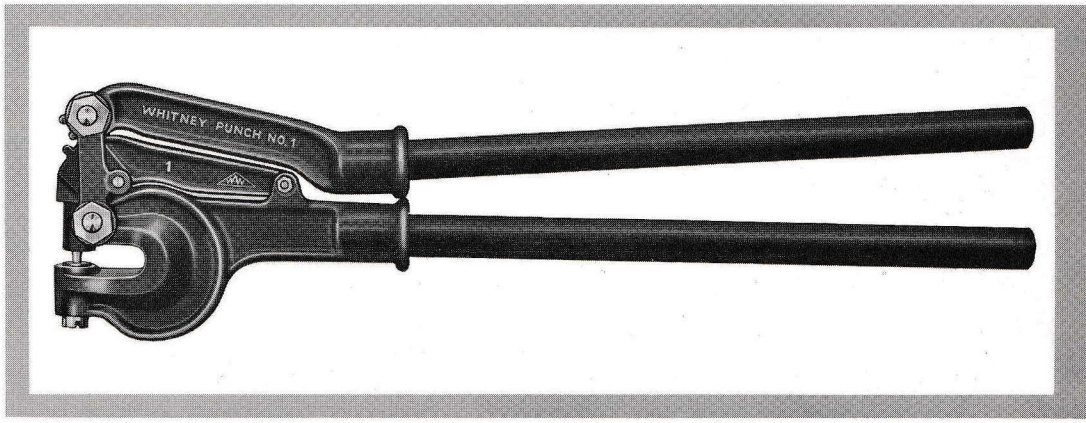

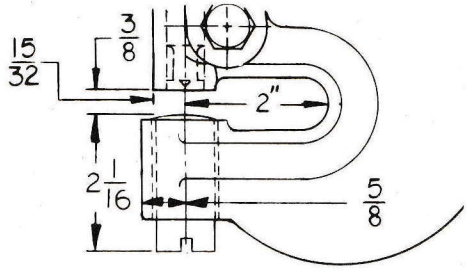

JAW DIMENSIONS

Most powerful portable lever-operated tool in the WAWhitney line, the No. 1 punch features gear and cam design for ease of punching holes as large as 9/16″ diameter. Insertable pipe handles are used so the tool may be dismantled for storing or carrying in the toolbox. All main parts are drop-forged steel with wearing parts heat treated.

The No. 1 punch is supplied complete with a punch and die and a die adjusting key. Unless otherwise specified, a 5/16″ punch and die is supplied.

NO. 8C CLIP PUNCH . . . *for locking sheet metal seams*

Capacity — three thicknesses of 20-ga steel

Length — 18-1/2″

Throat depth — 2″

Weight — 8 lb

Tooling: Supplied with one No. 8C clip punch and die set.

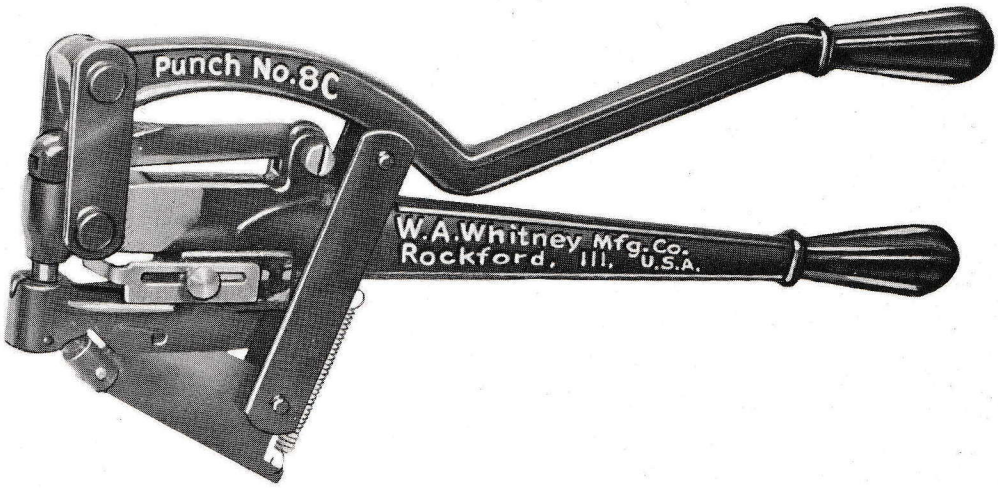

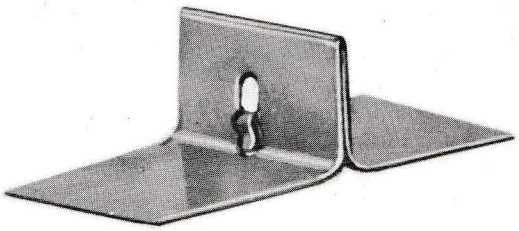

Punches and clips in one double-action operation.

This WAWhitney punch is especially designed for securely fastening seams in duct and sheet metal work. One operation only is required for the complete lock — no hammering down is necessary. An adjustable side gage permits setting of the throat depth to exact requirements for fast, accurate positioning on repetitive work. Replaces rivets and sheet metal screws to fasten 2 or 3 pieces of sheet metal.

THE ORIGINAL

WAWhitney • Iron-Man Portable Punches

NO. 4D, 6D, and 8D SHEET METAL INDENTING PUNCHES

These WAWhitney lever punches are especially designed for making thumbnail notches to lock together sheet metal seams. They are extremely useful on duct and furnace installations and other classes of work requiring the joining of sheet metal sections. The tight, secure indenting work performed is illustrated below.

All three punches have drop-forged main parts and heat-treated wear parts for long-lasting, accurate performance. An adjustable side gage is provided on the 4D and 8D punches to permit setting of throat depths to any desired point. The 6D has a shallow throat depth which acts as a gage suitable for most indenting jobs.

Punches are supplied complete with one indenting punch and die set.

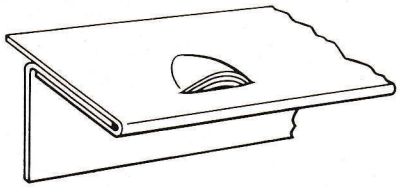

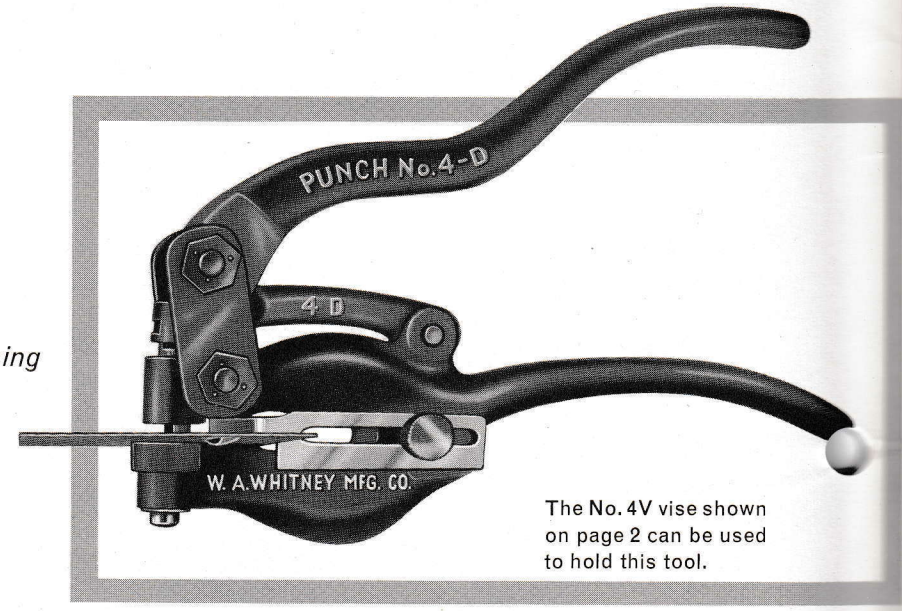

The No. 4V vise shown on page 2 can be used to hold this tool.

NO. 4D PUNCH

. . . for light-duty sheet metal joining

Length — 8-1/2″

Throat depth — 2″

Weight — 2½ lb

Capacity — 3 thicknesses 26-ga mild steel

Indent size — 1/8″ x 5/16″ wide

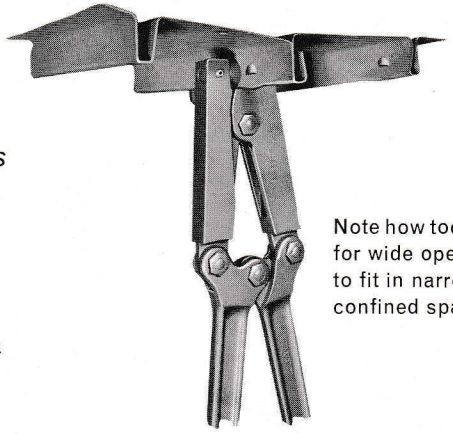

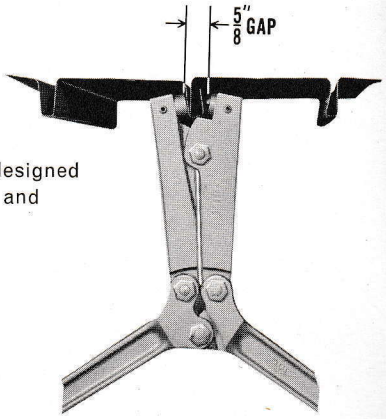

Note how tool is designed for wide opening and to fit in narrow, confined space.

NO. 6D PUNCH

. . . especially designed for joining roof deck sections

Length — 27″

Throat depth — 5/8″

Weight — 12 lb

Capacity — 3 thicknesses 20-ga mild steel

Indent size — 1/4″ x 9/16″ wide

NO. 8D PUNCH

Length — 18-1/2″

Throat depth — 2″

Weight — 7-1/2 lb

Capacity — 3 thicknesses 20-ga mild steel

Indent size — 7/32″ x 3/8″ wide

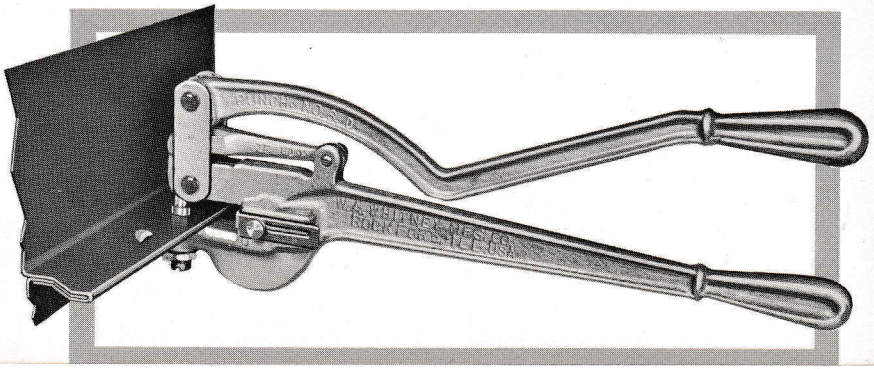

NO. 1-31 COR • SHEAR . . . *a portable, hand-operated shear that cuts the cost of cutting corrugated sheets*

Capacity: 24-ga high-tensile deck steel
Corrugations up to 1-3/4″ deep
Widths to 30″

Weight: 110 lb • **Length:** 48″

Tooling: Typical blade sets listed below. For other corrugated patterns, consult factory.

The portable Cor•Shear was developed to answer the increasing demand from warehouses and contractors for low-cost equipment for shearing corrugated roofing and other corrugated steel or aluminum sections. It completely eliminates the need for stocking different lengths.

No mounting is required. The shear can be operated by one man on the floor of the shop or on the ground at the job site. Material is cut to exact length, minimizing scrap and lap. Cuts are clean and burr-free, made quietly without distortion at either end of cut. There are no sharp edges and there is no loss of material.

Different shear blades are required for different forms of corrugation as illustrated below — change-over is easily made in a matter of minutes. The lower blade has the same form as the corrugation pattern, while the upper one is especially designed for correct shearing action. Blades are made from high-quality, high-chrome, high-carbon tool steel and can be resharpened.

TYPICAL CORRUGATED SECTIONS HANDLED BY COR•SHEAR

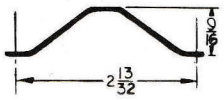

Granco "standard Corruform" (28 ga)
Order Cor • Shear Blade Set No. A-1 (26″ long).

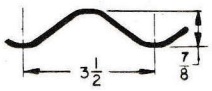

Granco "heavy-duty corrugated" (26 ga)
Order Cor • Shear Blade Set No. A-2 (31-1/2″ long).

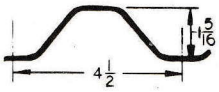

Granco "Tufcor" (24 ga)
Order Cor • Shear Blade Set No. A-3 (31-1/2″ long).

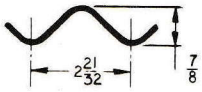

U. S. Steel 7/8″ x 2-21/32″ x 24 ga
Order Cor • Shear Blade Set No. A-4 (31-1/2″ long).

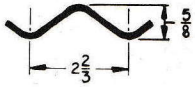

Pittsburgh Steel Prod. Fab-Form 5/8 x 2-2/3 x 27 ga.
Order Cor • Shear Blade Set No. B-1 (36″ long for #1-36 Cor • Shear only).

CHICAGO STEEL SLITTING SHEAR

For slitting long sheets and cutting steel bars, banding, angle iron, electrical cable and wire, belting, and other metallic and nonmetallic forms.

Capacity — 1/8″ thick mild steel (blade cutting length — 3-1/2″)

Weight — 22 lb

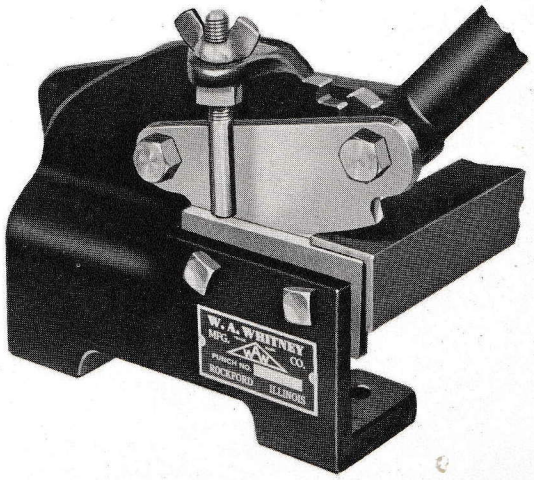

No shop is complete without this handy bench shear, long a "standard" in the industry. The main frame is a solid one-piece steel casting with offset for clearance in cutting long sheets. The lever and gear segment is a one-piece steel drop forging. Blades are made of high-grade tool steel and easily replaced. An adjustable holddown is provided.

For cutting 1/8″ angle iron, each leg of the angle iron is cut as shown in the illustration and the corner is broken, giving very little distortion.

A favorite for on-the-job work such as installing overhead doors, this shear may be easily bolted to a plank for use in the field.

THE ORIGINAL

WAWhitney • Iron-Man Lever-Operated Bench Presses

NO. 91 PRESS . . . most powerful of its type

Capacity — 10 tons
2″ round hole through 12-ga mild steel (adaptable to 5″ through 20 ga — see page 43).
1-3/4″ through 1/8″ mild steel
3/4″ through 3/16″ mild steel
1/2″ through 1/4″ mild steel

Throat depth — 5″ max. with adjustable back gage

Weight — 79 lb
Punches channel with 2-1/2″ flange x 1/4″ web
Punches angle iron 2-1/2″ x 2-1/2″ x 1/4″

Tooling: For an exceptionally wide range of work — see pages 38 through 48.

Narrow strippers are used for punching up through 1″ dia. holes and wide strippers for holes between 1″ and 2″ dia.

Illustration shows the narrow (7/8″) die shoe used with angle, channel iron, and all holes through 5/8″ round. Other die shoe sizes standard for round holes through 2″. Also adapted to punch up to 5″ dia. — see page 43.

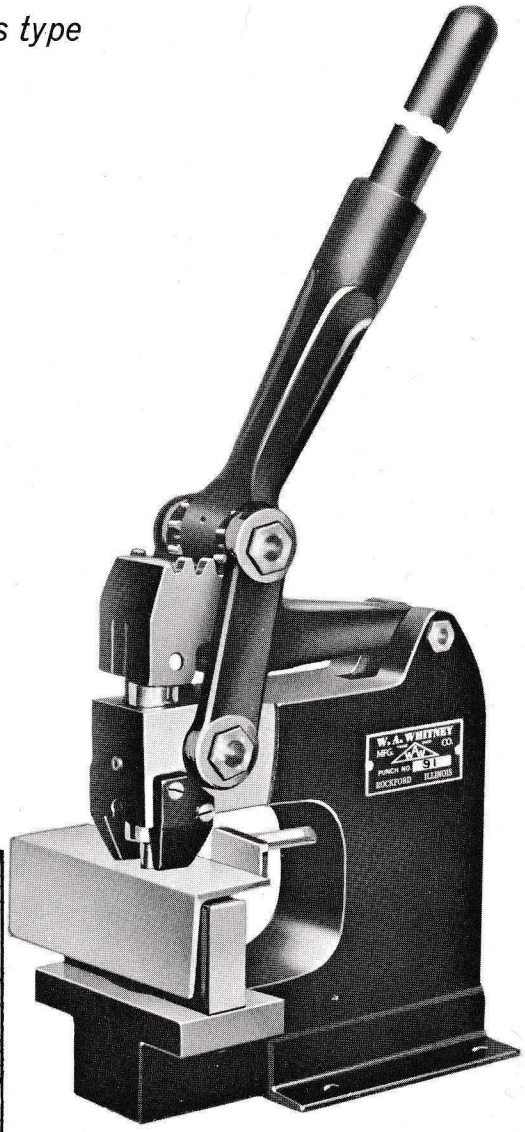

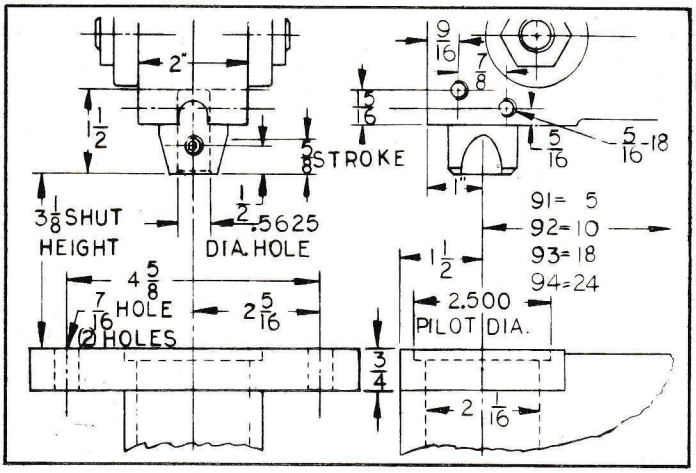

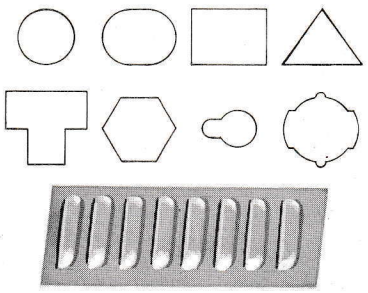

Here is the biggest bench press buy available in its class anywhere. It offers versatility to handle a tremendous range of work, plus a hefty 10-ton capacity for making big holes of various shapes through thicknesses of up to 1/4″ mild steel. It finds exceptionally wide application in ornamental iron, sheet metal, and model shops, as well as in general industrial applications and in the plants of electrical equipment manufacturers.

The No. 91 press makes round, square, rectangular, triangular, and hexagonal, and special holes, slots, louvres, keyholes, electrical knockouts, corner rounds, and other shapes. Pictured on these pages are just a few of the wide variety of operations it performs — and WAWhitney can provide special tooling for any requirement within its capacity. When ordering, specify size and shape of holes or type of forming, notching, bending, or other class of work required. In all cases, specify thickness and type of material.

The No. 91 bench press comes standard with one punch and die up to 5/8″ dia. (1/2″ if not specified), and No. 91-7/8 die shoe and narrow strippers. See tooling pages 38-48.

NO. 92, 93, AND 94 BENCH PRESSES . . . *with deeper throats*

These presses offer the same versatility and capacity with the same tooling as the No. 91 punches, differing only in throat depth to accommodate larger workpieces. All working parts of No. 91, 92, 93, and 94 bench presses are completely interchangeable.

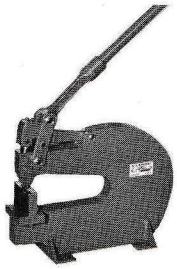

No. 92 Press — Made of 2-1/2" plate. Throat depth of 10". Weight 155 lb.

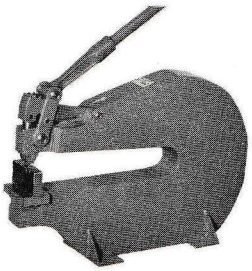

No. 93 Press — Made of 4" plate. Throat depth of 18". Weight 435 lb.

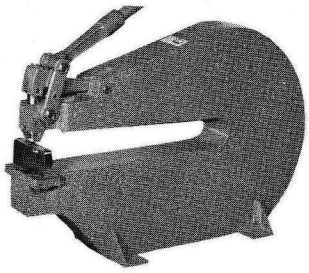

No. 94 Press — Made of 4" plate. Throat depth of 24". Weight 655 lb.

ADAPTATIONS FOR SPECIAL WORK REQUIREMENTS

Angle notching — see page 41 for tooling.

This setup is used for cutting a notch in angle iron up to 1-1/2" x 1-1/2" x 1/8". The die set is made with a backing plate so that the workpiece will not push away as the cut is started.

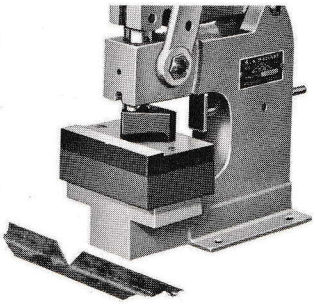

Punching Unistrut — see page 43 for tooling.

Fabricators of Unistrut installations will welcome this standard WAWhitney No. 91 punch tooling setup.

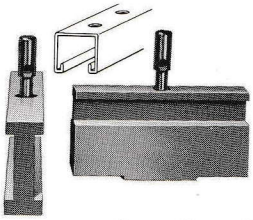

Pipe notching — see page 42 for tooling.

Setup shown notches pipe to make a right-angle T-joint.

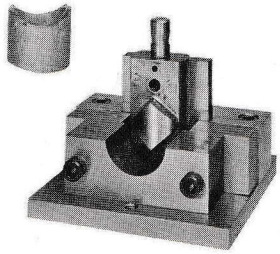

Pipe punching

An outstanding example of Model 91 press adaptability is this pipe punching setup available standard from WAWhitney.

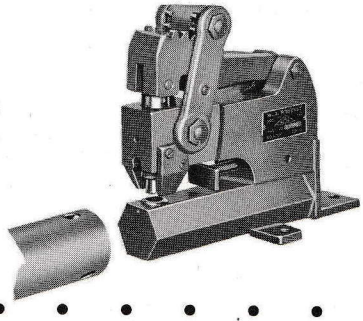

Large Round punching see page 43 for tooling.

This rugged setup makes punching large holes in sheet metal an easy task.

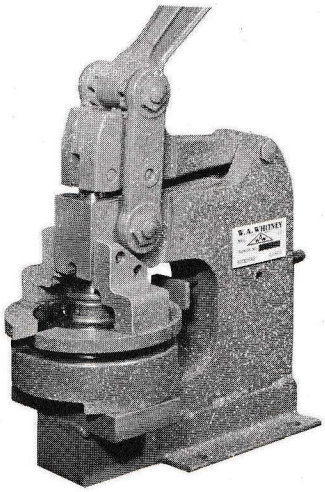

CABINETS FOR NO. 91 AND 92 PRESSES

The heavy-gage welded steel cabinet No. 91-60 provides ideal mounting for No. 91 and 92 presses • maximum efficiency • ease of use. Slanted shelves at rear provide convenient storage for extra punches, dies, and die shoes. Four No. 91-61 portable punch and die racks are furnished standard. A chute guides slugs to bottom of cabinet where container may be placed Cabinet is designed for four-point bolting to the floor.

Floor space — 14" x 26"

Weight — 75 lb

Height to No. 91 Press Die — 38-1/2"

Height to No. 92 Press die — 40-1/2"

Punch and Die Racks No. 91-61

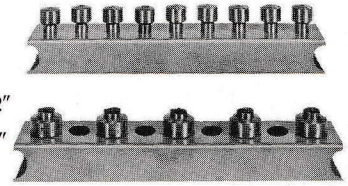

Each rack holds nine sets punches and dies 7/8" or 1-3/16" OD dies, or five sets 1-15/16" or 2-7/16" OD dies. Holes provided for convenient wall mounting where cabinet is not used.

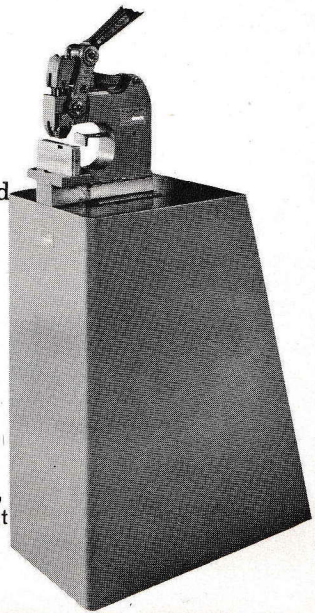

Section 2

THE ORIGINAL

. . . . . WAWhitney • Hydraulically Powered Hydramic

for punching, shearing, forming, notching,

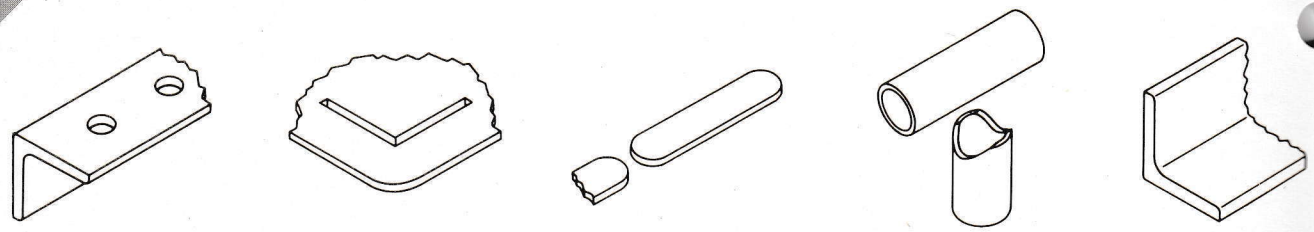

SPEED AND EFFICIENCY TO OUTPERFORM DRILLS, SAWS, AND BIG COSTLY EQUIPMENT

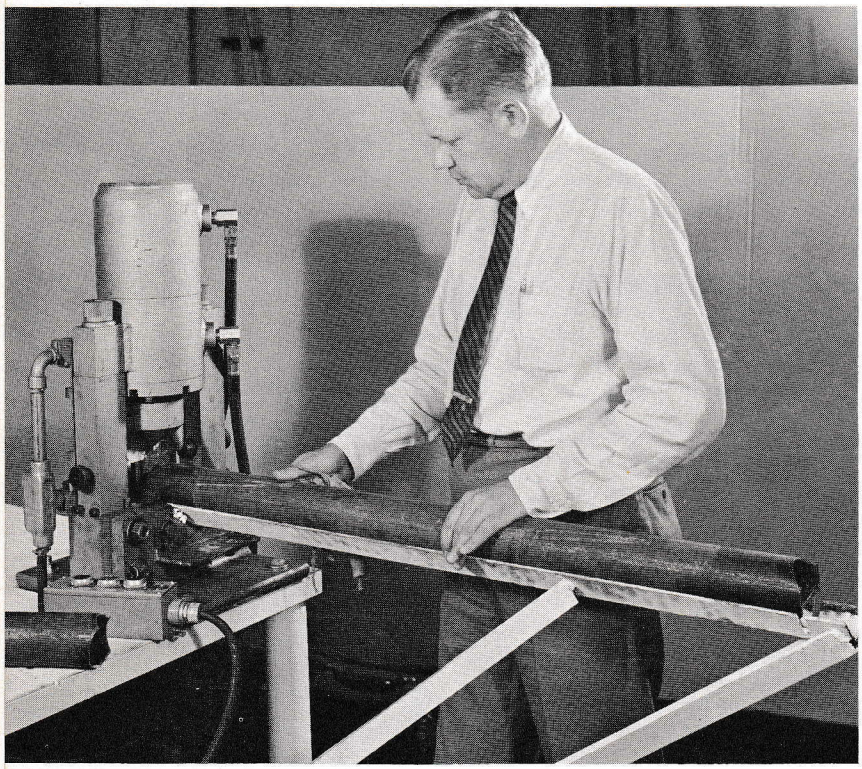

Bench-mounted No. 606 Hydramic shear — Hanover Neon Electric Corporation, Columbus, Ohio.

Here's the new method of metalworking! For work within their capacity, no other equipment can compare with hydraulically powered Hydramic presses. They provide lower costs and better, faster work for steel warehouses, ornamental iron shops, sheet metal shops, sign shops, structural fabricators, manufacturing plants — in fact, wherever metal is worked.

Hydramic presses make holes faster at lower cost than do hand punches or any types of drilling machines. They cut off metal faster at lower cost than hand-operated shears or sawing machines.

They represent less capital investment than do big ironworkers having dies and capacities never used in many shops . . . which lack portability available in Hydramic equipment . . . and which often cause work flow congestion because they must be used for so many operations.

With Hydramic equipment, the shear is placed in the steel storage area and the portable or stationary press is located elsewhere. The two machines cost less than a single ironworker.

Add it up: low initial investment, low tooling cost, low maintenance cost, safe, easy operation, and fast, accurate work — these are the machines that pay for themselves in a hurry.

Why make chips . . .

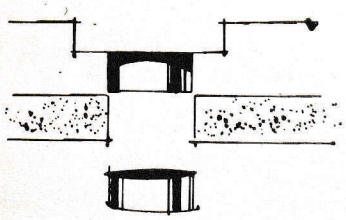

When you can take the hole out whole!

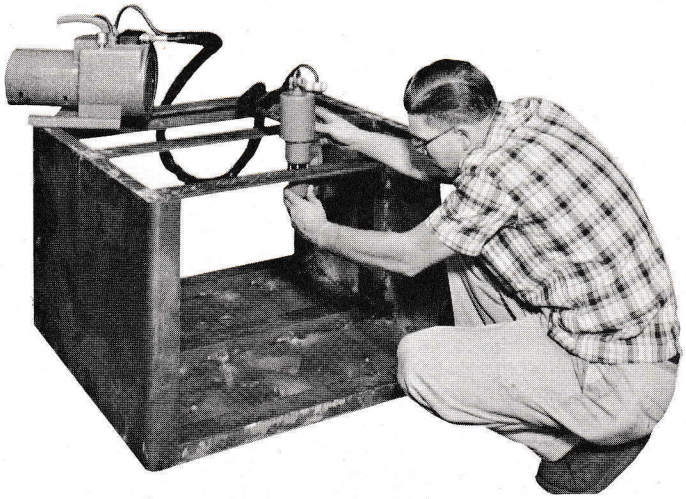

No. 710 — Hydramic 10-ton press with 700-T-1/2-hp power unit. designed for hand-carrying to work on large pieces.

Presses and Shears

bending, coping, squeezing, riveting

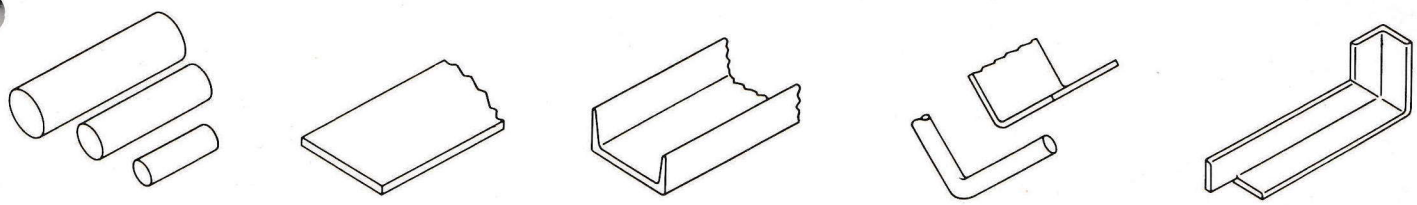

PORTABILITY TO SAVE TIME AND ELIMINATE THE HIGH COST OF MATERIAL HANDLING

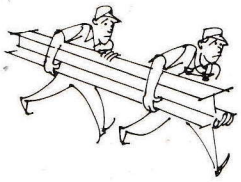

Why move large work to the machine . . .

When you can move the machine to the work?

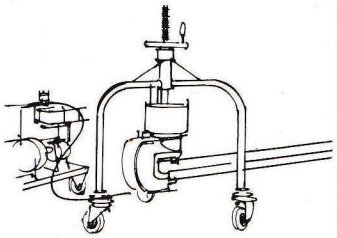

The savings in material handling alone will quickly pay off the modest investment in WAWhitney Hydramic presses. The smaller machines and their power units can easily be carried by the operator directly to the work. The larger portable machines can be mounted on castered tripods and the power units complete with motor mounted on castered carts.

Assembly-line production techniques can be achieved by overhead mounting of WAWhitney presses as illustrated at the right.

The WAWhitney Hydramic press line offers versatility for handling a tremendously wide range of work. Standard machines will handle the jobs illustrated above. Special machines or tooling can be developed to meet nearly any requirement.

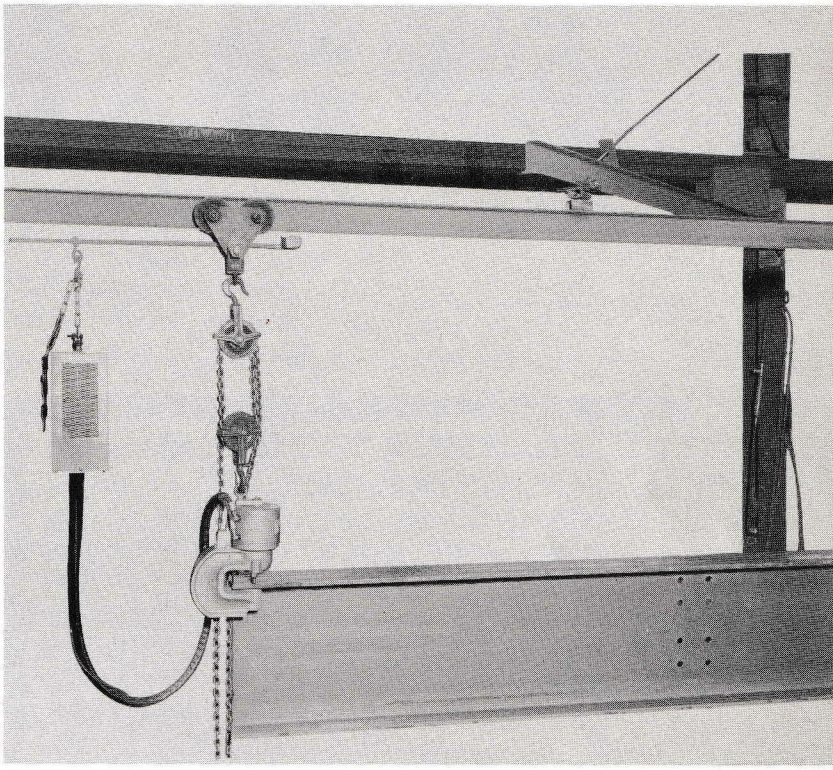

Versatile overhead installation of portable Hydramic punch at Hustad Co., Minneapolis, Minn.

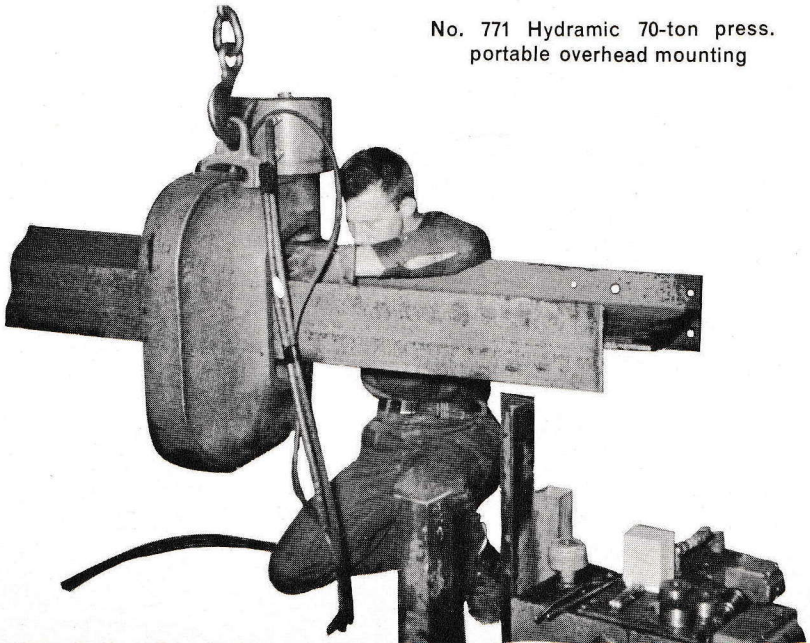

No. 771 Hydramic 70-ton press. portable overhead mounting

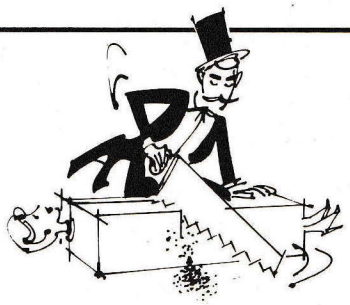

Why whittle out chips . . .

when you can cut metal off in one stroke!

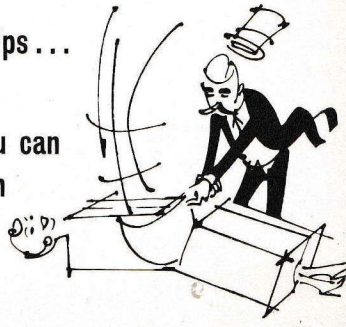

THE ORIGINAL

. . . . . WAWhitney • 700 Series Hydramic Portable Flange

Capacities 5 to 90 tons for punching plate, angles, channels, beams

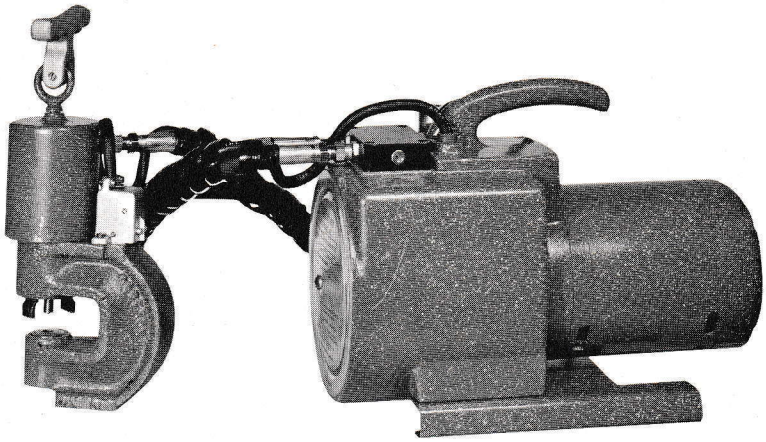

No. 710 Hydramic 10-ton press with 700-T-1/2-hp power unit. No. 720 20-ton press identical except for size. Both designed for hand-carrying to the work.

MAXIMUM DIAMETER HOLE IN VARIOUS THICKNESSES OF MILD STEEL

Thickness Mild Steel Inches	Hydramic Punch Size — Inches						
	705	710	720	730	750	770	790
1/8	1/2	13/16	13/16	1-1/16	1-1/16	1-1/16	1-1/16
3/16	5/16	5/8	13/16	1-1/16	1-1/16	1-1/16	1-1/16
1/4	1/4	7/16	13/16	1-1/16	1-1/16	1-1/16	1-1/16
5/16		3/8	3/4	1-1/16	1-1/16	1-1/16	1-1/16
3/8		5/16	5/8	15/16	1-1/16	1-1/16	1-1/16
1/2			7/16	11/16	1-1/16	1-1/16	1-1/16
5/8				9/16	7/8	1-1/16	1-1/16
3/4					3/4	1-1/16	1-1/16
7/8						15/16	1-1/16
1						13/16	1

WAWhitney 700 series Hydramic portable flange punches provide great versatility for punching structurals and steel or nonferrous parts. They also can be used for riveting — see page 17.

Depth gage and pointer on model 750, 770, and 790 punch units facilitate straight-line punching operations by eliminating most layout work and center punching. Only a scribed line is required. The operator simply lines up the pointer with the back gages against the edge of the work.

Tooling. Round, square, oval, and rectangular punches and dies (pages 36 and 37) are standard. Special shapes available on order. Bevel serrated dies also standard for punching flanges of American Standard channels and I-beams.

Controls. Pushbuttons mounted on the punch unit provide instantaneous start, stop, and reverse ram control to permit jogging when locating center point on prick punch layout mark. A treadle-type foot switch with the same features can be furnished instead of pushbuttons.

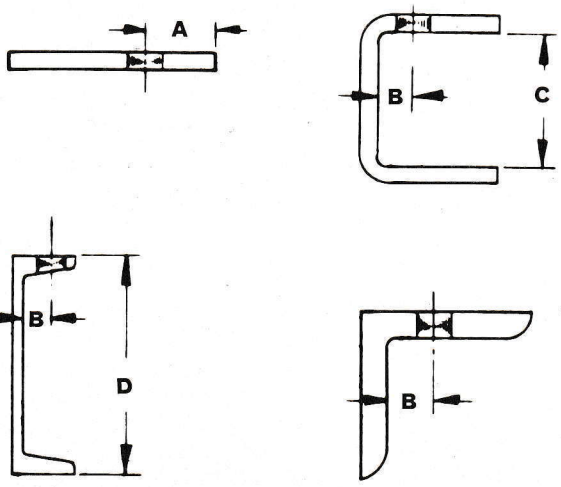

STANDARD 700 SERIES LIMITATIONS

	705	710	720	730	750	770	790
A	2-1/4	2-1/4	2-1/4	3-1/4	4-1/4	4-1/4	4-1/4
B	15/32	11/16	11/16	1-1/8	1-1/8	1-1/8	1-1/8
C	2-3/16	2-5/16	2-1/2	3-1/4	4-1/4	4-3/4	5
D	3	3	3	5	5	5	5

Note: Work sizes shown indicate dimensional limitations only — refer to tonnage charts for hole size vs. thickness.

Punches

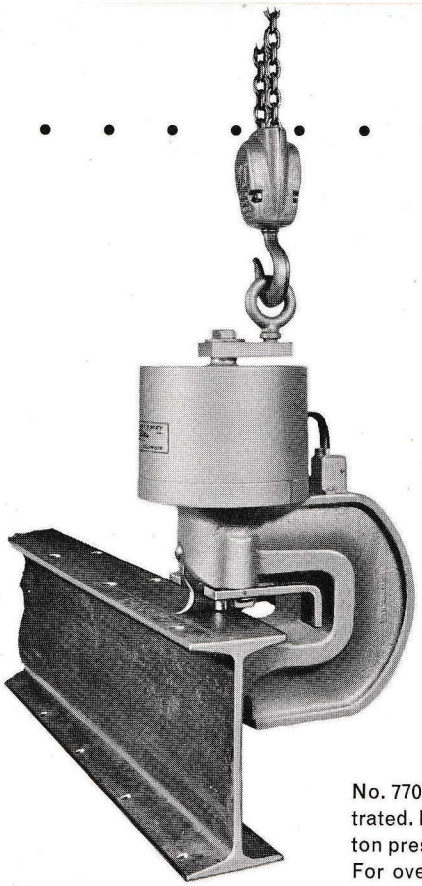

No. 770 Hydramic 70-ton press illustrated. No. 750 50-ton and No. 790 90-ton presses identical except for size. For overhead or tripod mounting — see page 18.

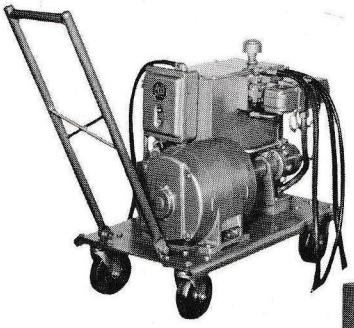

No. 700-S-3-hp power unit

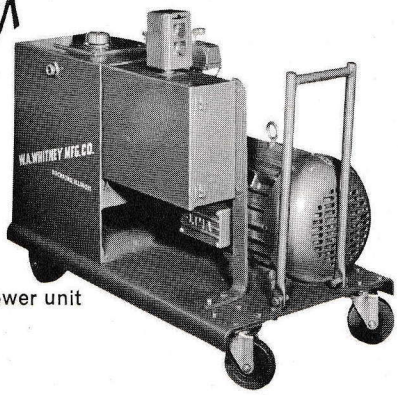

No. 700-S-10-hp power unit

Choice of power units for No. 750, 770, and 790 presses

POWER UNITS

For No. 705 through 730 presses: 1/2 hp (700-T-1/2) — 110-volt single phase. Direction of flow is controlled by reversing the motor which runs only when control buttons are pushed. 8-foot hose assembly standard; up to 30-foot permissible to eliminate moving of power unit when punching long sections. Up to 3 units can be powered from one power unit with a selector valve.

For No. 750, 770, and 790 presses: Choice of 3 or 10 hp. The 3-hp unit provides the same capacity as the 10-hp but at a slower cycle. Both operate at 220/440-volt, 3 phase, and include starters. Furnished with casters, handle, 12-foot long hose assembly, and control switches to mount on punch units. Hoses to 60 feet permissible to eliminate moving of power unit when punching long beams.

700 SERIES SPECIFICATIONS

Model No.	Tonnage	Throat Depth In.	Stroke In.	Punch No.	Die No.	Cycle Time in Seconds: 1/2 hp Weight 59 lb	3 hp Weight 275 lb	10 hp Weight 700 lb	Punch Weight lb
705	5	2-1/4	5/8	10	10	1.7	.6	.24	14
710	10	2-1/4	7/8	20	20	4.1	1.2	.5	23
720	20	2-1/4	7/8	20	20	9.3	2.5	1	36
730	30	3-1/4	7/8	40	40	14.8	3	1.2	70
750	50	4-1/4	1-3/8	40	40	—	10	4	200
770	70	4-1/4	1-3/8	770	40	—	15	6	240
790	90	4-1/4	1-3/8	770	40	—	20	8	275

All power units operate with hydraulic pressure of 5000 psi.

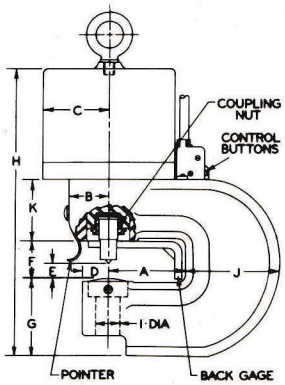

700 SERIES DIMENSIONS — INCHES

Model No.	A	B	C	D	E	F	G	H	I	J	K
705	2-1/4	1	1-5/16	15/32	3/8	1-3/16	2-3/16	8-5/16	1/2	2-5/16	1-3/4
710	2-1/4	1-3/16	1-3/4	11/16	5/8	1-7/16	2-5/16	10-1/16	7/8	2-1/2	2-1/8
720	2-1/4	1-1/2	2-1/4	11/16	5/8	1-7/16	2-1/2	10-5/8	7/8	2-3/4	2-1/4
730	3-1/4	1-15/16	2-3/4	1-1/8	5/8	1-7/8	3-1/4	12-1/2	1-1/8	4	2-3/4
750	4-1/4	2-1/16	3-5/8	1-1/8	1-3/32	2-5/32	4-1/4	16	1-1/8	5	3-7/16
770	4-1/4	2-11/16	4-1/8	1-1/8	1-3/32	2-5/32	4-3/4	17-1/2	1-1/8	5-1/2	4
790	4-1/4	3-1/4	4-3/4	1-1/8	1-3/32	2-1/4	5	18-3/8	1-1/8	6	4-1/2

THE ORIGINAL

. . . . . Whitney • 701 Series Portable Hydramic Web

Capacities 20 to 90 tons for punching plate, angles, channels, beams

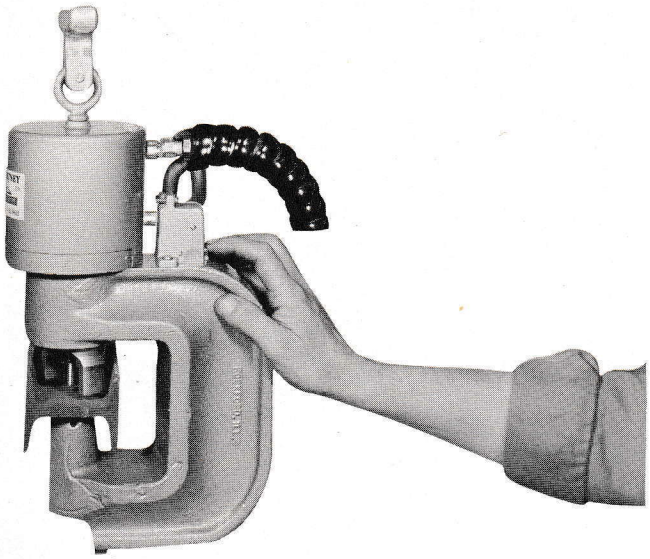

No. 721 Hydramic 20-ton press for hand-carrying to work.

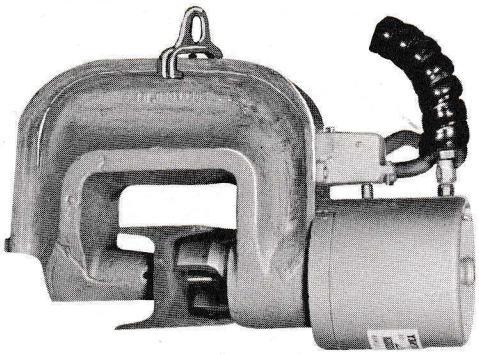

No. 731 Hydramic 30-ton press — for overhead or tripod mounting (see page 18).

Designed specifically to handle web punching operations, 701 series Hydramic presses also will punch flanges, flats, etc. They can be modified for punching crane rails and can be used for riveting — see page 17.

MAXIMUM DIAMETER HOLE IN VARIOUS THICKNESSES OF MILD STEEL

Thickness Mild Steel Inches	Hydramic Punch Size — Inches				
	721	731	751	771	791
1/8	13/16	13/16	1-1/16	1-1/16	1-1/16
3/16	13/16	13/16	1-1/16	1-1/16	1-1/16
1/4	13/16	13/16	1-1/16	1-1/16	1-1/16
5/16	3/4	13/16	1-1/16	1-1/16	1-1/16
3/8	5/8	13/16	1-1/16	1-1/16	1-1/16
1/2	7/16	11/16	1-1/16	1-1/16	1-1/16
5/8		9/16	7/8	1-1/16	1-1/16
3/4			3/4	1-1/16	1-1/16
7/8				15/16	1-1/16
1				13/16	1

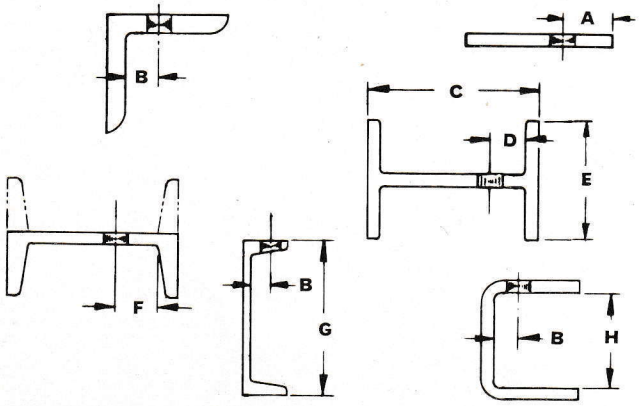

Tooling. Standard round, square, oval, and rectangular tooling is described on pages 36 and 37. Special shapes are available on order. Bevel serrated dies also are available for punching flanges of American Standard channels and I-beams.

The tools feature a threaded-type one-piece stripper which is easily adjusted up and down by hand to suit various thicknesses of work.

The adjustable suspension eye bracket can be rotated and clamped to the "C" frame for operating the punch in either a vertical or horizontal position.

Attachment. Punching close to the corner of a workpiece presents a stripping problem. To overcome this a bridge plate is clamped to the bottom of the standard stripper. Being U-shaped, it encompasses the punch except for a sight opening in the front.

Controls. Pushbuttons provide instantaneous start, stop, and reverse ram control to permit jogging when locating center point of punch in prick punch layout mark. A treadle-type foot switch with the same features can be furnished instead of pushbuttons.

701 SERIES PRESS LIMITATIONS

	A	B	C	D	E	F	G	H
721	2-3/4	11/16	5-1/2	1	3-1/2	3/4	4	4-3/4
731	4-1/4	11/16	8-1/2	1	5-1/2	3/4	5	6-3/8
751	6-1/4	1-1/8	12-1/2	1-1/2	8-1/2	1-1/8	8	10
771	7-3/4	1-1/8	15-1/2	1-1/2	10-3/4	1-1/8	10	12-1/4
791	12-1/2	1-1/8	25	1-1/2	16	1-1/8	15	16

Punches

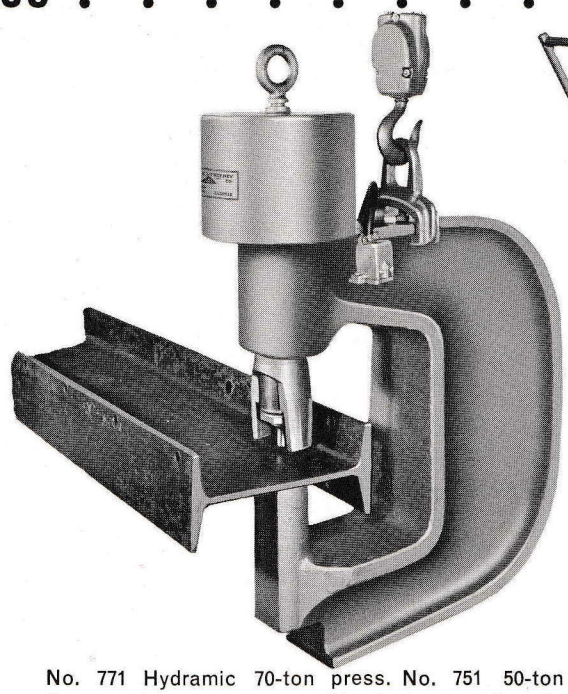

No. 771 Hydramic 70-ton press. No. 751 50-ton and No. 791 90-ton presses are identical except for size. For overhead or tripod mounting (see page 18).

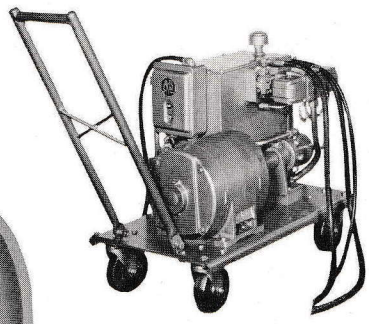

No. 700-S-3 hp

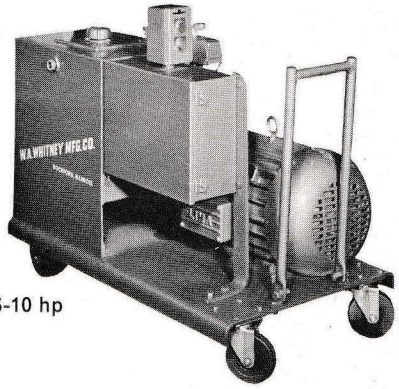

No. 700-S-10 hp

Choice of power units for No. 751, 771, and 791 presses

POWER UNITS

For No. 721 and 731 Presses: 1/2 hp (700-T-1/2) 110-volt, single phase. Direction of flow is controlled by reversing motor which runs only when control buttons are pushed. 8-foot hose assembly standard; up to 30-foot permissible to eliminate moving of power unit when punching long sections. Up to 3 units can be powered from one power unit with a selector valve.

For No. 751, 771, and 791 Presses: Choice of 3 or 10 hp. The 3-hp unit provides same capacity as 10 hp but with a slower cycle as shown below. Furnished with casters, handle, 12-foot hose assembly, and control box. Hose lengths to 60 feet permissible to eliminate need for moving power unit when punching long beams. Motors are 220/440-volt, 3 phase, with starters.

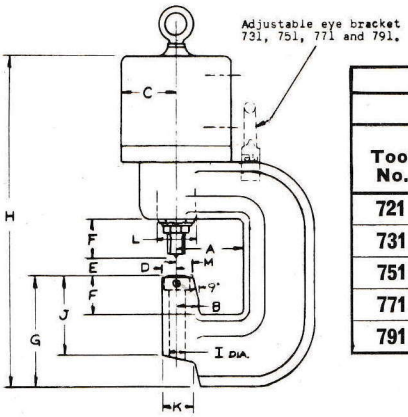

701 SERIES SPECIFICATIONS

Tool No.	Tonnage	Throat Depth	Stroke	Punch	Die	Cycle Time in Seconds: 1/2 hp Weight 59 lb	Cycle Time in Seconds: 3 hp Weight 275 lb	Cycle Time in Seconds: 10 hp Weight 700 lb	Punch Weight lb
721	20	2-3/4	7/8	#20	#20	9.3	2.5	1	58
731	30	4-1/4	7/8	#40	#20	14.1	3	1.2	124
751	50	6-1/4	1-3/8	#40	#40		10	4	300
771	70	7-3/4	1-3/8	#770	#40		15	6	560
791	90	12-1/2	1-3/8	#770	#40		20	8	1200

701 SERIES DIMENSIONS — INCHES

Tool No.	A	B	C	D	E	F	G	H	I	J	K	L	M
721	2-3/4	1	2-1/4	11/16	5/8	1-5/8	4-3/4	13-1/2	7/8	3-3/16	1-3/8	1-3/4	3/4
731	4-1/4	1	2-3/4	11/16	5/8	2-5/8	6-3/8	16-1/2	7/8	4-3/8	1-3/4	2-3/8	3/4
751	6-1/4	1-1/2	3-5/8	1-1/8	1-3/32	4-1/8	10	27-1/4	1-1/4	7	2-1/2	2-3/8	1-1/8
771	7-3/4	1-1/2	4-1/8	1-1/8	1-3/32	5-1/4	12-1/4	31	1-1/4	8-1/2	2-7/8	2-3/8	1-1/8
791	12-1/2	1-1/2	4-3/4	1-1/8	1-3/32	7-5/8	16	38	1-1/8	12	3	2-3/4	1-1/8

THE ORIGINAL

WAWhitney • Portable Hydramic Notching Presses

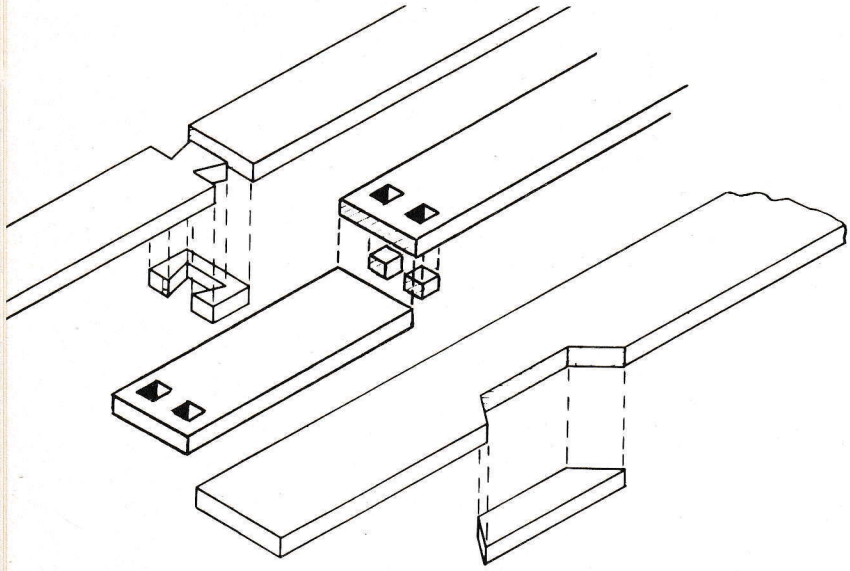

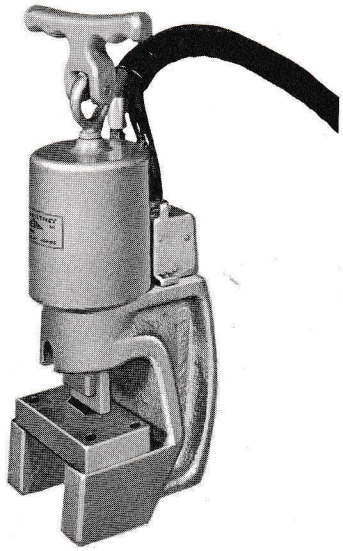

No. 712 10-ton notching press. No. 722 20-ton and No. 732 30-ton presses are identical except for size.

WAWhitney Hydramic notching presses are designed especially for notching and cutoff operations such as illustrated above. These units have been applied to numerous operations in several large manufacturing plants eliminating costly cumbersome workhandling. Manufacturers' names furnished upon request. Tooling can be provided for any notching requirement within the maximum limitations shown in the table at the bottom of the page. Send print, sketch, or sample of required notch for a fast accurate quotation. Strippers can be mounted to jaw when required. Punches have a backing guide that never leaves the die and acts as a work locator.

Controls for up, down, and jog are mounted at the back of the press. The 700-T-1/2-hp power unit is generally used with this tool (110-volt, single phase) which has an 8-foot long hose assembly. Longer lengths available. Units can be used on 700-S-3 or 10-hp power units by modifying cylinder ports.

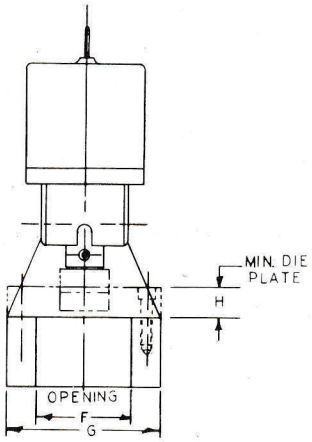

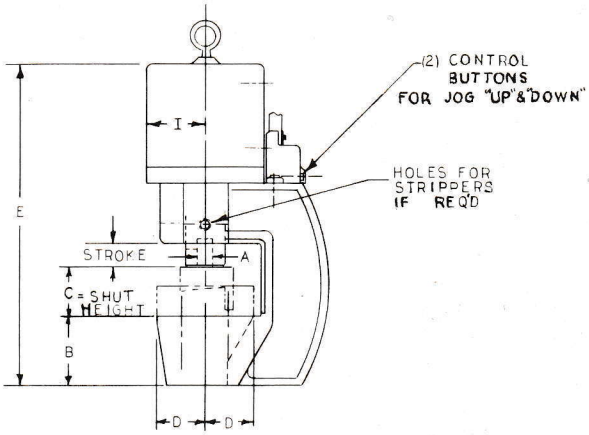

SPECIFICATIONS					
Tool No.	Tonnage	Cycle Time*	Stroke	Weight of Notch Unit	Max. Notch Length X Width
712	10	4.1 Sec	5/8	30 lb	2 x 1
722	20	9.3 Sec	7/8	60 lb	2-1/2 x 2
732	30	14.8 Sec	7/8	75 lb	2-1/2 x 2
713	10	4.1 Sec	5/8	30 lb	
723	20	9.3 Sec	7/8	60 lb	
733	30	14.8 Sec	7/8	75 lb	

DIMENSIONS								
A	B	C	D	E	F	G	H	I
7/8	2	1-1/2	1-1/4	10-3/4	2-1/2	4-1/2	7/8	1-3/4
7/8	2-3/8	2	2	12-3/8	3-1/4	5-1/2	1-1/4	2-1/4
1-1/4	2-3/4	2-3/4	2-1/4	14-1/8	3-1/4	6	1-5/8	2-3/4
7/8	2-1/8	4-1/2	1-1/2	13-9/16	3	5	7/8	1-3/4
7/8	2-3/8	4-3/4	2-1/4	15-1/8	3-1/4	5-1/2	1-1/4	2-1/4
1-1/4	2-3/4	5	2-1/2	16-7/8	3-1/4	6	1-5/8	2-3/4

* Cycle time with 1/2-hp power unit. Power units operate at 5000 psi.

Portable Riveting Presses

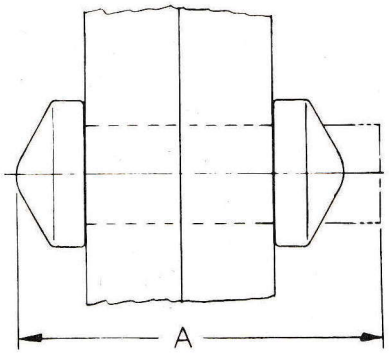

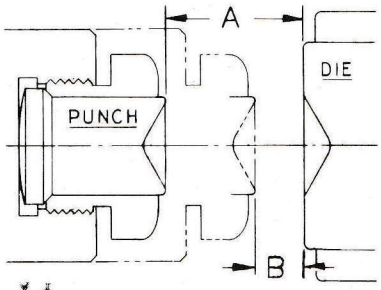

The Hydramic flange and web punches illustrated on pages 12, 13, 14, and 15 can be used for riveting with the tooling illustrated here.

The modified cone head rivet produced offers several advantages. The rivet centers itself in the punch and die, producing a neat-appearing concentric head. The modified cone also requires less force than other types, such as the round head and does not buckle or bulge the sheet or plate being riveted.

To produce the modified cone head, standard mild steel round head rivets are used. The required length measured from under the head can be determined by adding the material thickness (grip) to 1.5 times the rivet diameter. Since the stroke on the portable punches is quite short, be sure the over-all length of the rivet (including head) does not exceed the "A" opening.

Because a different and accurately controlled pressure is required for each size of rivet, the press must be equipped with an adjustable relief valve. On the 700-S-1/2-hp power unit used on the 5 to 30-ton tools, an adjustable external relief valve must be factory-mounted. The 700-S-3 and 700-S-10 power units on the larger tools are equipped with an adjustable relief valve. A pressure gage and shutoff valve also are necessary for checking the pressure when making the pressure adjustments.

The table below lists correct tooling and dimensional specifications. See page 36 for punch and die prices.

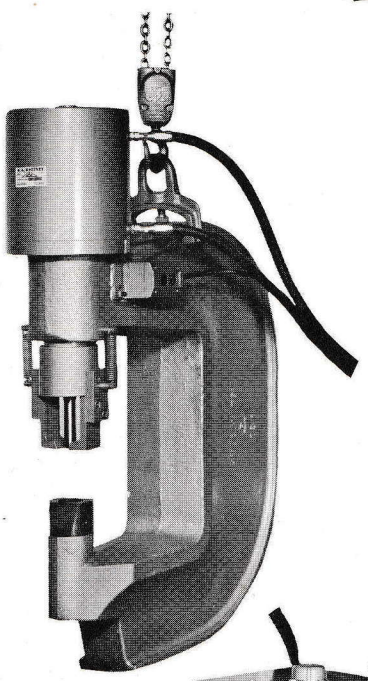

TOOLING FOR RIVETING

Tool Number	705	710	720 721	730	731	750 751	770 771	790 791
Max. Rivet Diameter	3/16	1/4	3/8	1/2	1/2	5/8	3/4	7/8
Punch Number	10 RMC	20 RMC	20 RMC	40 RMC	40 RMC	40 RMC	770 RMC	770 RMC
Die Number	10 RMC	20 RMC	20 RMC	40 RMC	20 RMC	40 RMC	40 RMC	40 RMC
A. Max. O.A. Rivet Length	3/4	1″	1″	1-1/8	1-1/8	1-5/8	1-3/4	1-3/4
B. Minimum Grip	1/8	1/8	1/8	1/4	1/4	1/4	3/8	3/8

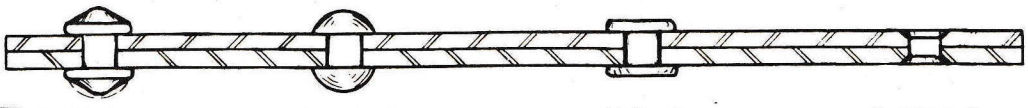

Above drawing shows comparison of different types of commonly used rivets. WAWhitney tooling makes the modified cone rivet.

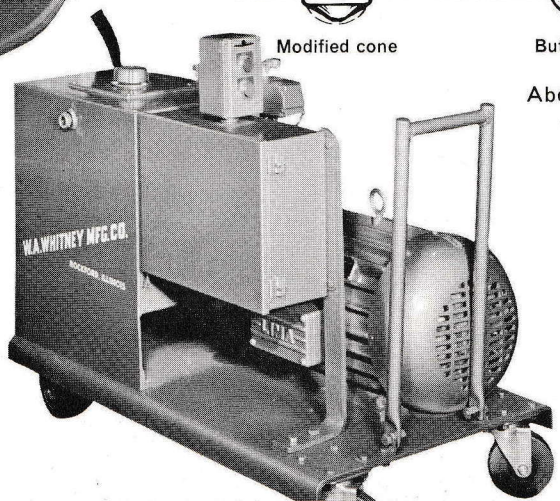

Photo at left shows special 90-ton 12-1/2 throat depth rivet removing unit. Removes 1″ round head rivets in one stroke with 10-hp power unit.

CASTERED TRIPOD FOR PORTABLE HYDRAMIC PRESSES

The high cost of handling big, heavy, or awkwardly shaped work can be completely eliminated through use of a castered tripod mounting for the 50, 70, and 90-ton portable flange punches and for the 50 and 70-ton web punches (the 90-ton web punch is too large). The adjustable castered tripod permits wheeling the machine directly to the work. Power units for these presses are separately mounted on casters.

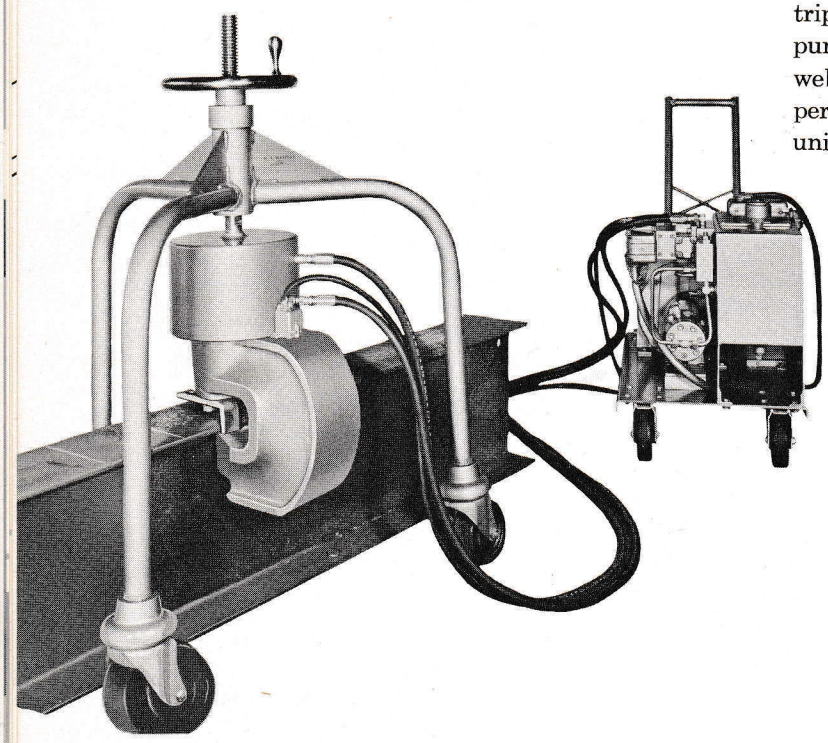

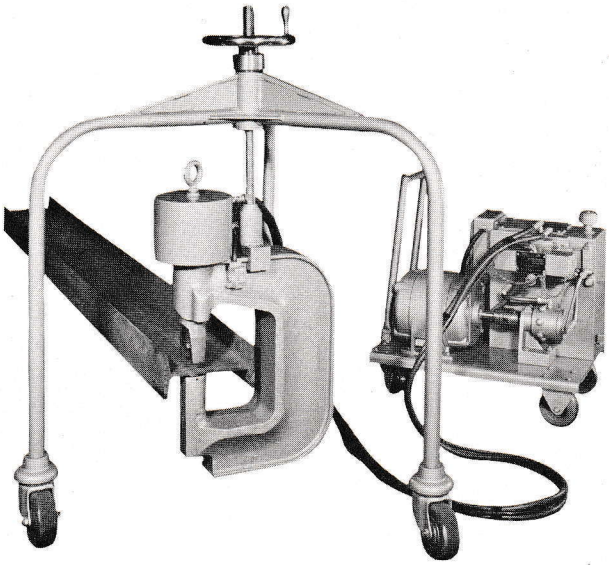

UNIVERSAL CRADLE FOR PORTABLE HYDRAMIC PRESSES

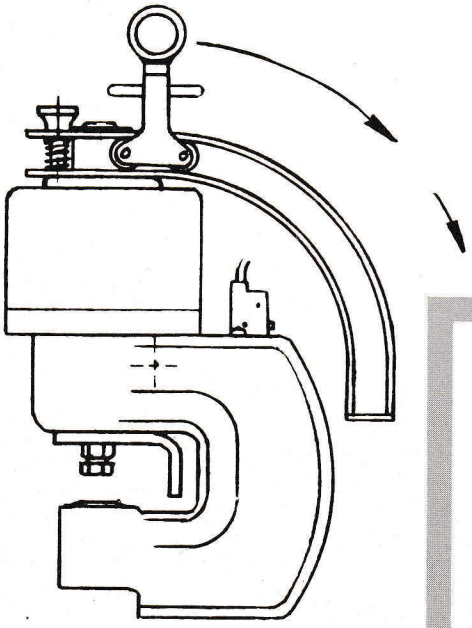

For overhead installations of WAWhitney portable Hydramic flange punches, a universal cradle provides complete flexibility to handle work in any position. Operation of the universal cradle is illustrated in the accompanying drawings.

Three models are available: 750U — for 750 press; 770U — for 770 press; 790U — for 790 press.

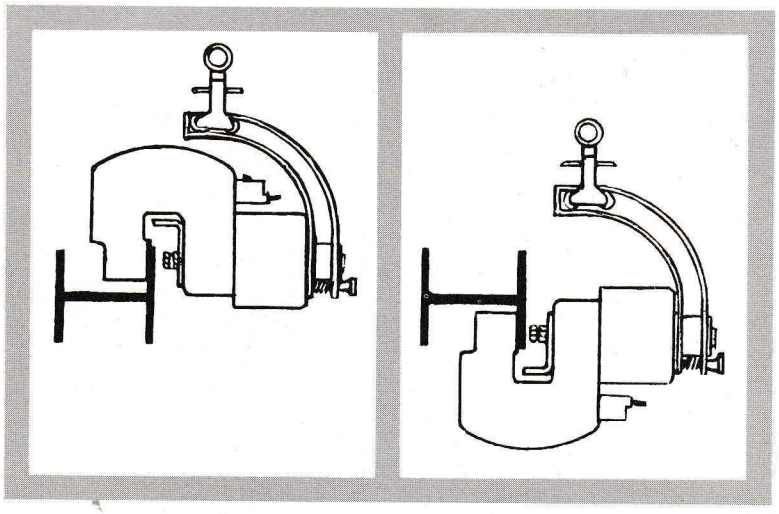

STANDARD AND SPECIAL PRESSES *. . . to meet your requirements*

Various adaptations of WAWhitney Hydramic presses can be made to suit special production requirements. These include special tooling, special control systems, various types of mounting arrangements, and completely special presses. Units can be designed to meet JIC specifications.

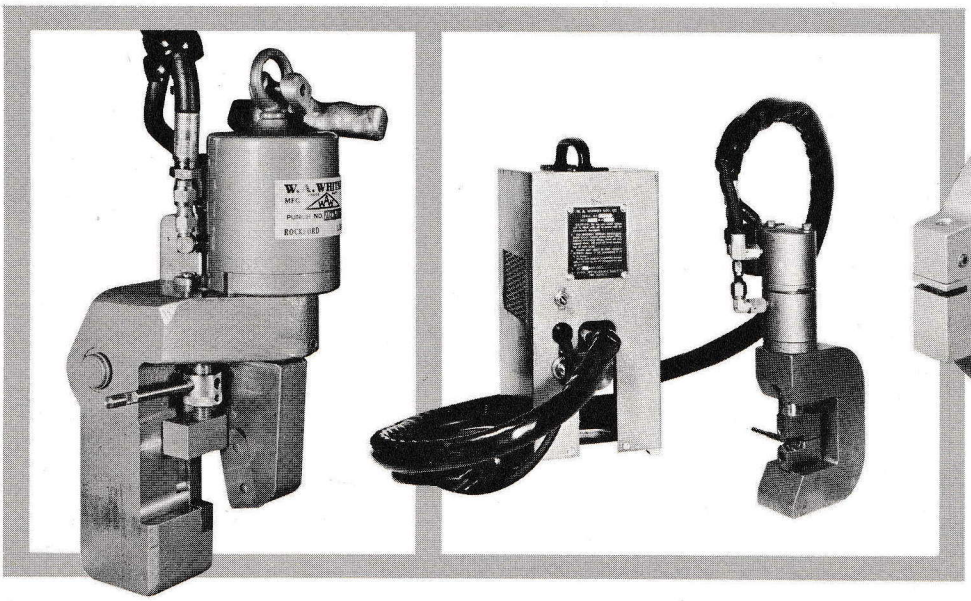

No. 710-1005 special hydraulic shear for shearing copper strands. Maximum size of gathered strands 3/8" x 1-1/2". This unit used with a 1/2-hp power unit. Operating cycle is ten strokes per minute at full stroke.

Hydramic tube pinch-off press and power unit developed specially for electronic vacuum tube manufacturer simultaneously cuts off and seals copper tubing. Used by many leading electronic manufacturers.

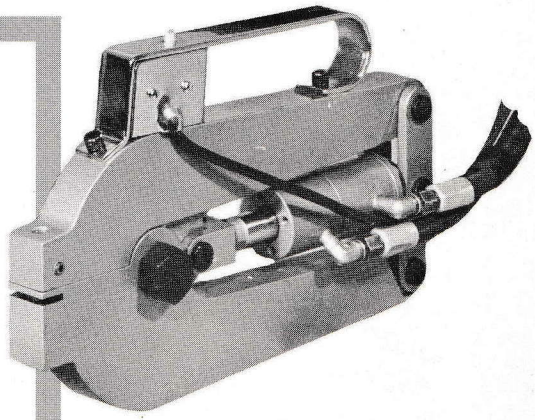

Portable Hydramic punch for notching and punching dandy rolls. Punch operation is controlled by a pushbutton on the top of the handle. When the button is depressed, the punch enters material, and when the button is released, the punch is retracted. Two models, 3-1/2 and 5-ton capacities, are available. Larger models can be developed.

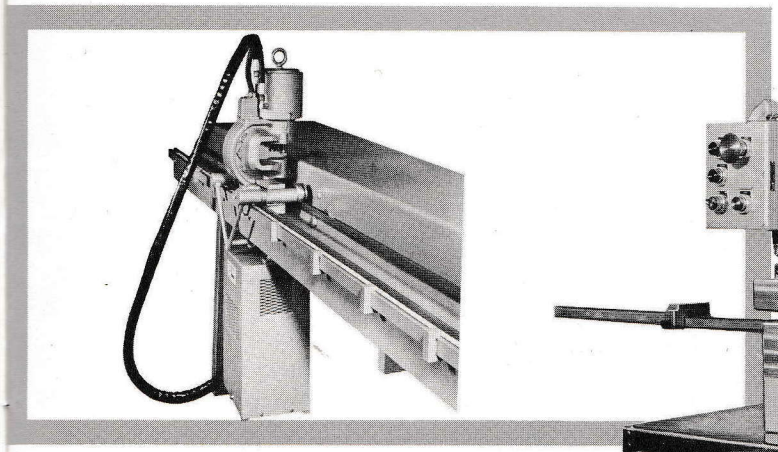

Rail-mounted punches — Illustrated is a No. 700 unit rail-mounted alongside a bench to eliminate tedious and costly layout work on large pieces. Mounts 705 through 730 flange units with power unit suspended below.

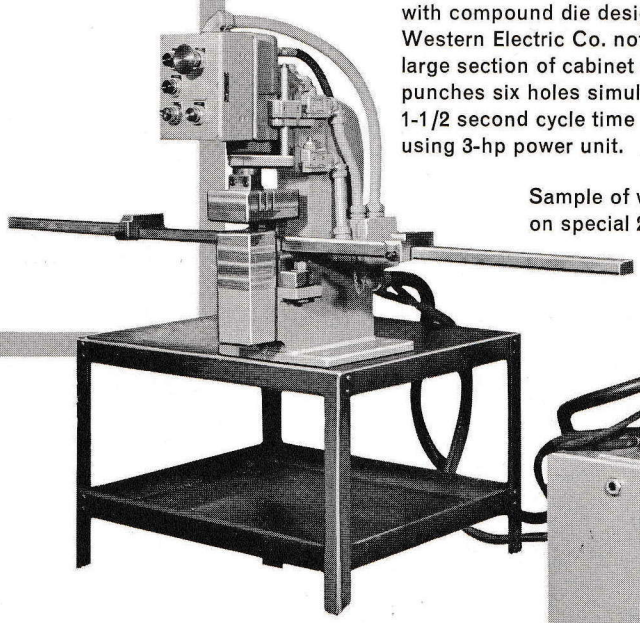

Special 20-ton Hydramic press with compound die designed for Western Electric Co. notches large section of cabinet and punches six holes simultaneously. 1-1/2 second cycle time using 3-hp power unit.

Sample of work produced on special 20-ton press.

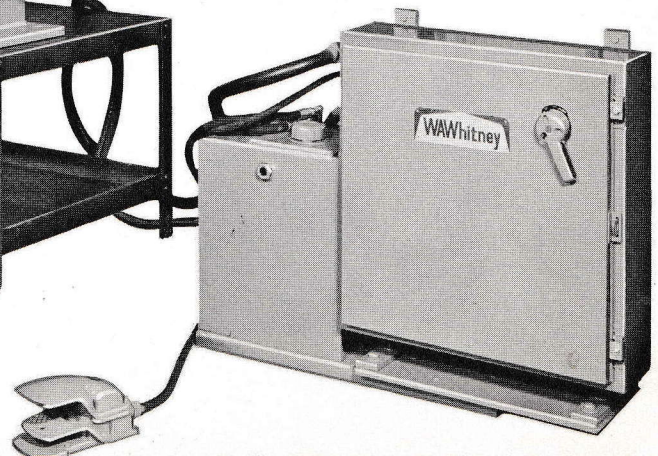

THE ORIGINAL

WAWhitney • Stationary Hydramic Presses

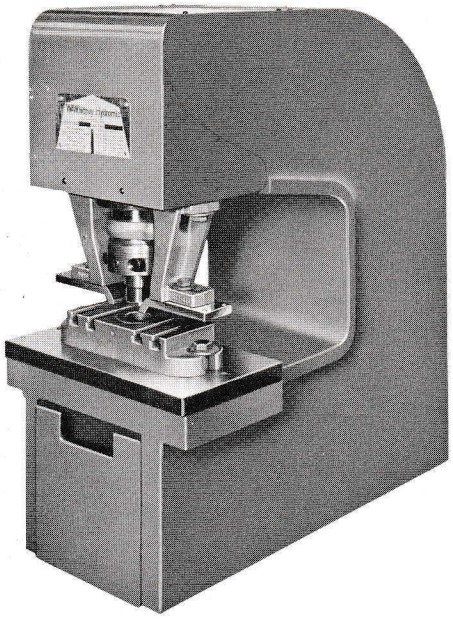

No. 612 press — 12-ton capacity 12″ throat depth — may be mounted on bench or cabinet.

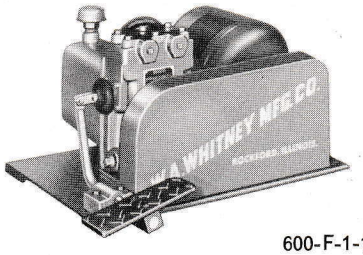

600-F-1-1/2 hp

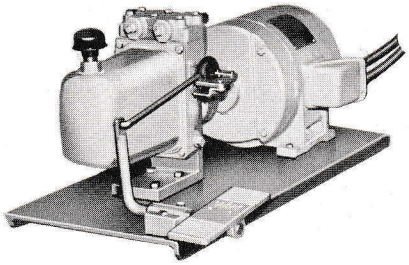

600-F-3 hp

Choice of power units: 1-1/2 or 3 hp. The smaller, less expensive 1-1/2-hp unit provides the same capacity but a slower cycle — see specification table.

Multipurpose machines for punching holes, shearing, forming, riveting, and other operations—full jog control for working to layouts

WAWhitney stationary Hydramic presses are particularly applicable for short-run work and on jobs where punching must be done to center punch marks because expensive gaging would not be warranted. *The operator has full control over the ram*, making it possible for him to inch it down or up, and still have the feature of making a fast cycle if desired. In addition to punching round holes in sheet metal, angle iron, channel iron, and other structural shapes, these punches are ideal for punching round, square, oval, rectangular, triangular, hexagonal, and odd shapes in steel, aluminum, copper, brass, and other materials. They can be easily adapted to shearing, notching, cutting off, and forming operations, as well as punching several holes at once using special die sets. Additionally, they are applicable to riveting and other press-working operations.

The presses can be easily and quickly changed over. The adjustable-type stripper brackets will handle almost all jobs, eliminating expensive stripper plates and makeshift parts. The stripper plates can be turned upside down and reversed to allow more gap between the top of the die and the stripper where it is necessary to enter a workpiece having a high flange. The stripper brackets can be easily removed when using special die sets not requiring strippers.

The press has only one moving part, the ram, eliminating practically all mechanical problems. The guide bracket fastened to the ram has a bronze bushing which slides on a guidepost to keep the ram from turning while using irregular shaped punches and dies. Ruggedly built of welded steel plate, the presses are covered with a sheet steel hood for neat, smooth appearance.

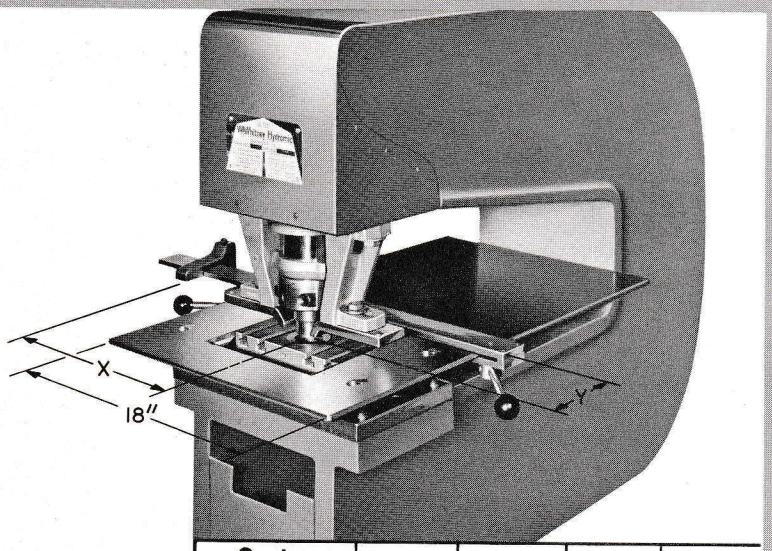

Gaging Dimension	612	613	625	626
X	18	18	18	18
Y	9-1/4	21-1/4	9-1/4	21-1/4

Optional worktable eliminates hours of layout — is easily mounted on the press by four screws that fasten it to the bolster plate. The T-square-type gage is readily adjusted for repetitive work.

• for metal fabricators . . . sheet metal, ornamental iron, and sign shops • • • • . . . electrical parts manufacturers, etc.

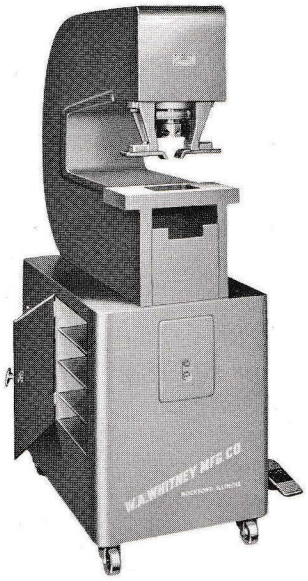

No. 613 press — 12-ton capacity, 24″ throat depth — shown mounted on WAWhitney cabinet.

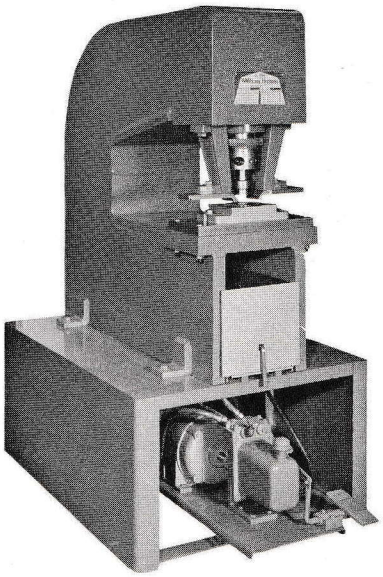

No. 625 and 626 presses — 25-ton capacity with 12″ and 24″ throats — are provided on steel base shown.

SPECIFICATIONS — STATIONARY PRESSES (Dimensions in inches)						
PRESS NO.	**NO. 612**		**NO. 613**		**NO. 625A**	**NO. 626A**
Mounting	**Cabinet Model A**	**Bench Model B**	**Cabinet Model A**	**Bench Model B**	**Cabinet Model**	**Cabinet Model**
Tonnage	12	12	12	12	25	25
Throat Depth	12	12	24	24	12	24
Wt. Less Power Unit	1245 lb	1120 lb	1625 lb	1500 lb	2100 lb	3000 lb
Floor and Bench Space	34 x 22	28-1/2 x 11-1/4	34 x 22	42-1/4 x 11-1/4	36 x 35	36 x 49
Shut Height (no bolster)	4-3/4	4-3/4	4-3/4	4-3/4	6-5/8	6-5/8
Size of Bolster Plate	1″ x 8 x 15	1″ x 8 x 15	1″ x 8 x 15	1″ x 8 x 15	1-1/4 x 10 x 18	1-1/4 x 10 x 18
Full Stroke	1-1/2	1-1/2	1-1/2	1-1/2	1-3/4	1-3/4
Slug Opening in Bed	4-1/2 x 6	4-1/2 x 6	4-1/2 x 6	4-1/2 x 6	5-1/4 x 7	5-1/4 x 7
Hole in Ram	1″ dia. x 1-1/4 deep	1″ dia. x 1-1/4 deep	1″ dia. x 1-1/4 deep	1″ dia. x 1-1/4 deep	1-9/16 dia. x 2-1/4 deep	1-9/16 dia. x 2-1/4 deep
Motor Horsepower	1-1/2 or 3		1-1/2 or 3		3	3
Half Strokes/Minute**	16 or 30		16 or 30		14	14
Full Strokes/Minute	8 or 15		8 or 15		7	7
Wt. of Power Unit	160 or 224		160 or 224		224 lb	224 lb
Size of Base of P. Unit	14 x 24 or 14 x 34		14 x 24 or 14 x 34		14 x 34	14 x 34
Motor Specs/1800 RPM	* 220/440v, 3 ph, 60 cy.		* 220/440v, 3ph, 60 cy		220/440v, 3ph, 60 cy.	
Die Height Above Floor	43	—	45	—	44	44

* 110/220v, single phase, 1-1/2 hp only, available at extra cost.
** Normal punching stroke.

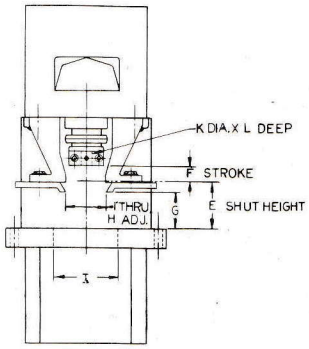

FRONT VIEW

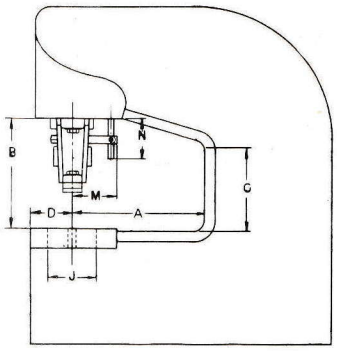

SIDE VIEW

DIMENSIONS (INCHES) STATIONARY PRESSES														
Model	**A**	**B**	**C**	**D**	**E**	**F**	**G**	**H**	**I**	**J**	**K**	**L**	**M**	**N**
612	12	10-3/4	9	4	4-3/4	1-1/2	3-21/32	4-1/2	6	4-1/2	1	1-1/4	4-1/2	4
613	24	10-3/4	7-1/2	4	4-3/4	1-1/2	3-21/32	4-1/2	6	4-1/2	1	1-1/4	4-1/2	4
625	12	14-3/8	13	4-1/2	6-5/8	1-3/4	3-29/32	5-1/2	7	5-1/4	1-9/16	2-1/4	5-1/2	4-1/2
626	24	14-3/8	10-1/2	4-1/2	6-5/8	1-3/4	3-29/32	5-1/2	7	5-1/4	1-9/16	2-1/4	5-1/2	4-1/2

Tooling for Models 612, 613, 625 and 626 Stationary Hydramic Presses

MODELS 612 AND 613

The 612 and 613 presses can be tooled with either of two standard types of tooling: No. 91 (pages 38-42) or No. 28 (pages 44-48). The No. 91 tooling features thin die shoes ideal for punching angle iron but is good only for holes up to 2″ dia. No. 28 tooling is standard through 4″ diameter. Some customers prefer the No. 91 tooling for holes through 2″ and No. 28 tooling for larger sizes through 4″.

Punching flat sheets — Up to 2″ diameter, use either No. 91 or No 28 tooling. From 2″ to 4″ diameter, use No. 28 tooling only.

Punching angle or channel iron — Use No. 91 tooling featuring thin die shoes. See Fig. 1.

Small channels. Ornamental iron shops making porch railings where it is necessary to punch 1″ channel with 1/2″ or 9/16″ square and 1/2″ x 11/16″ or 9/16″ x 3/4″ rectangular holes for inserting squared stock will find the special die setup shown in Fig. 2 ideal for their requirements. (This tooling also can be used on No. 625 and 626 presses using different stripper blocks.)

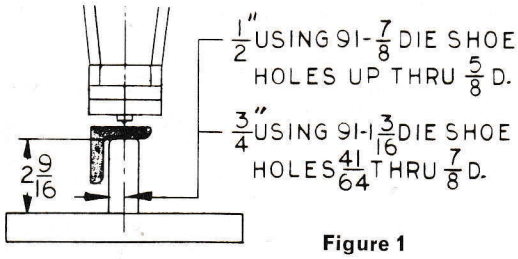

Figure 1

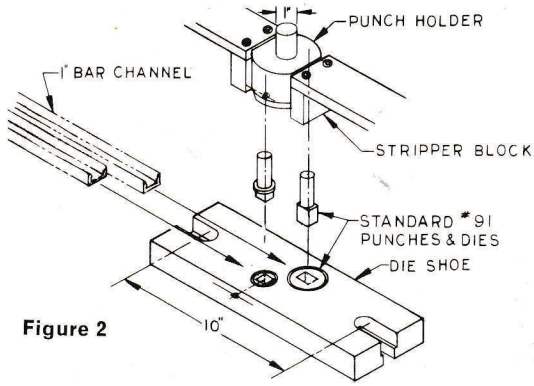

Figure 2

For horizontal railings, square holes are required, and where the railing is on an angle, rectangular holes are required. Usually this means a punch and die change-over, but not with the setup illustrated which includes two standard No. 91 punch and die sets held in one punch holder and die shoe. This setup completely eliminates the costly change-overs.

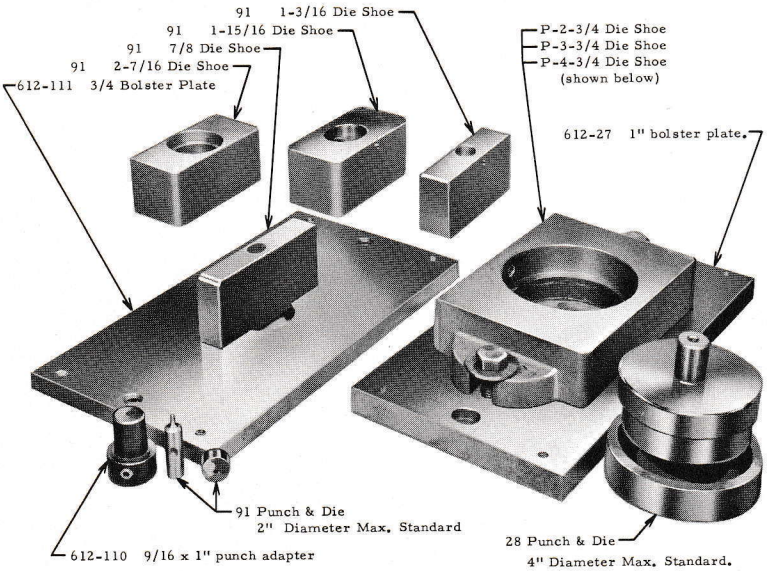

612 & 613 STANDARD TOOLING

MODELS 625 and 626

No. 28 tooling (pages 44-48) fits the No. 625 and 626 presses for punching round, square, oval, rectangular, and many other shapes of holes. Standard adjustable stripper brackets accommodate punches up through 5″ diameter by means of a simple adjustment, eliminating costly makeshift stripper plates which cover only a limited size range.

No. 91 tooling is not recommended for use on these 25-ton presses because of its relatively light construction (12 ton maximum).

Punching flat sheets — Use No. 28 tooling (see pages 44-48).

Punching angle iron — Two methods offered.

Method A — Use standard No. 28 tooling and punch the hole with leg up in a maximum of 3 x 3 x 3/8″ angle, the 3″ high leg being the limiting factor. This method usually presents a layout problem, but where the worktable is used, only a scribed line across the work is required, since the gage bar will establish the front-to-back dimension. See Fig. 3.

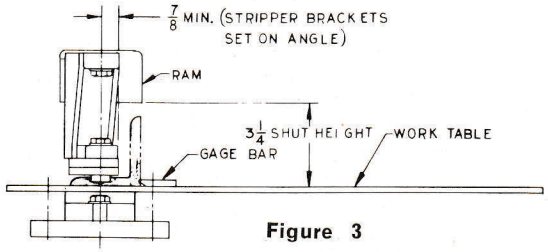

Figure 3

Method B — Use close-to-leg tooling for punching angle iron leg down (3″ maximum). This tooling features the use of a headed punch, No. 20, for positive stripping, plus slender quick-change die shoes. Two different die shoes are available: 626-24 die shoe with a No. 10 die for holes through 9/16″ diameter; 626-25 die shoe for No. 20 die for holes through 13/16″ diameter. For holes over 11/16″ up through 13/16″, a split coupling nut is used. The punch, die, and die shoe can be changed in a matter of minutes with the aid of the clamped-on die shoe (no long screws to thread out). The bolster plate used with the close-to-leg tooling is 1-1/4″ thick and has 1-5/8″ diameter slug hole. See Fig. 4.

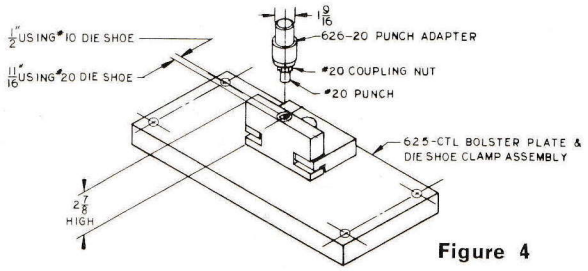

Figure 4

Channel iron — Three methods offered.

Method A — Standard No. 28 tooling can be used where it is permissible to punch with the legs of the channels up. The strippers are 3″ wide, so they will strip up through a 3″ wide channel where the flanges do not exceed 1-1/4″ high. See Fig. 5.

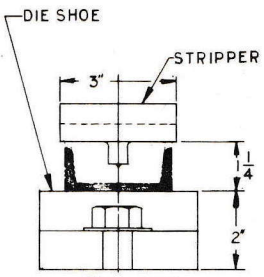

Figure 5

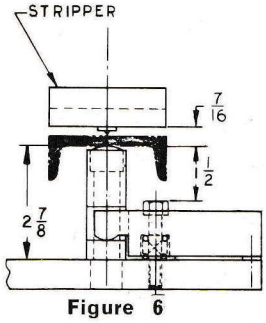

Figure 6

Method B — The close-to-leg tooling as shown for angle iron (described above) allows punching channel with the legs down, providing the channels are wide enough to clear the die shoes. See Fig. 6.

Method C — See No. 612 tooling for dual punch and die setup for punching different size holes in small 1″ channel without changing punches and dies. See Fig. 2.

TOOLING FOR STATIONARY PRESSES

NO. 612 AND 613 PRESSES — NO. 91 STYLE TOOLING						
Round Holes	1/8 to 5/8	41/64 to 7/8	57/64 to 1-1/2	1-33/64 to 2	2-1/32 to 3	3-1/32 to 4
Punch	#91	#91	#91	#91	Not available in #91 style Use #28 style see below	
Die #91	7/8 OD	1-3/16 OD	1-15/16 OD	2-7/16 OD		
Punch Adapter	612 - 110	612 - 110	612 - 110	612 - 110		
Die Adapter	none reqd	none reqd	none reqd	none reqd		
Die Shoe #91	7/8	1-3/16	1-15/16	2-7/16		
Bolster Plate	#612 - 111 3/4″ Thick					

NO. 612 AND 613 PRESSES — NO. 28 STYLE TOOLING						
Round Holes	1/8 to 1/2	33/64 to 13/16	53/64 to 1-29/64	1-15/32 to 2	2-1/32 to 3	3-1/32 to 4
Punch	#2	#28	#28	#28	#28	#28
Die #28	1-1/4 OD	1-1/4 OD	2-1/8 OD	2-3/4 OD	3-3/4 OD	4-3/4 OD
Punch Adapter	612 - 117	none reqd	none reqd	none reqd	none reqd	none reqd
Die Adapter	1-1/4 x 2-3/4	1-1/4 x 2-3/4	2-1/8 x 2-3/4	none reqd	none reqd	none reqd
Die Shoe	P-2-3/4	P-2-3/4	P-2-3/4	P-2-3/4	P-3-3/4	P-4-3/4
Bolster Plate	#612-27 4-1/4 hole 1″ Thick					

NO. 625 AND 626 PRESSES — NO. 28 STYLE TOOLING						
Round Holes	1/8 to 1/2	33/64 to 13/16	53/64 to 1-29/64	1-15/32 to 2	2-1/32 to 3	3-1/32 to 4
Punch	#2	#28	#28	#28	#28	#28
Die #28	1-1/4 OD	1-1/4 OD	2-1/8 OD	2-3/4 OD	3-3/4 OD	4-3/4 OD
Punch Adapter	P-2	P-28	P-28	P-28	P-28	P-28
Die Adapter	1-1/4 x 2-3/4	1-1/4 x 2-3/4	2-1/8 x 2-3/4	none reqd	none reqd	none reqd
Die Shoe	P-2-3/4	P-2-3/4	P-2-3/4	P-2-3/4	P-3-3/4	P-4-3/4
Bolster Plate	#626-2 4-1/4 hole 1-1/4″ Thick					

THE ORIGINAL

. . . . . WAWhitney • Hydramic Presses for Shearing and

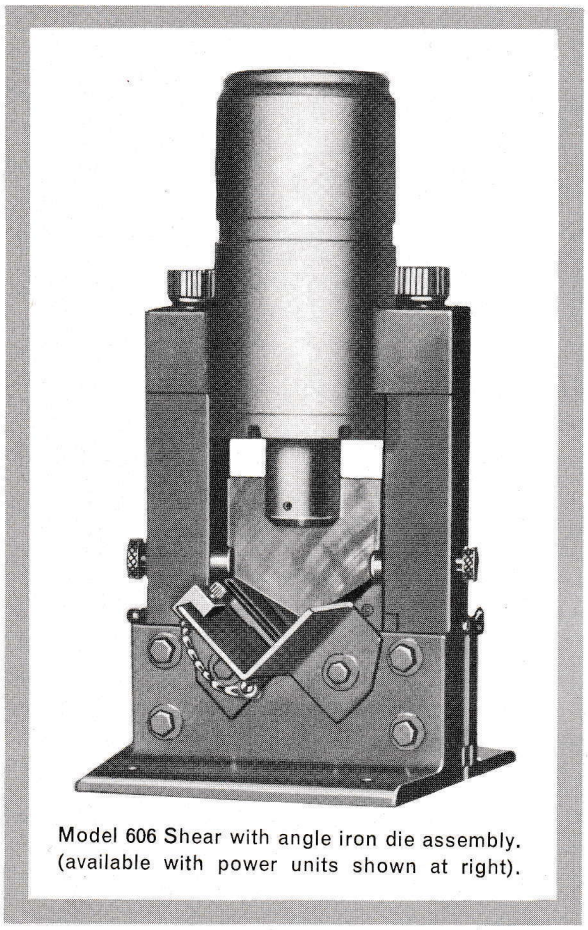

Model 606 Shear with angle iron die assembly. (available with power units shown at right).

MODEL 606 — 18-ton capacity

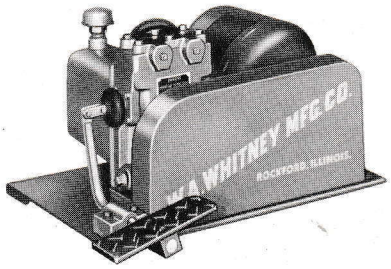

No. 600-F-1-1/2-hp unit

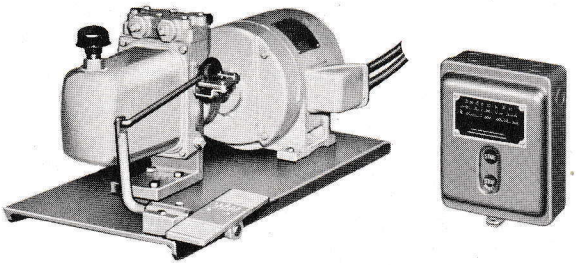

No. 600-F-3-hp unit

Choice of power units — The 1-1/2-hp unit provides equal capacity, but slower cycle time than the 3-hp unit as indicated in the table on facing page.

WAWhitney model 606 and 609 Hydramic shears are exceptionally versatile cost-cutting units for short- or long-run work. They provide distortion-free, burr-free shearing of angle iron, rods, channels, and flat stock, and will notch pipe, do flat stock forming, and other operations as well — see pages 26 and 27. Safety control, power, and precision are outstanding features.

The very finest of tool steels are used in the precision shear blades to insure clean cuts and long tool life — blade material is suitable for cutting stainless steel. See pages 26 and 27 for tooling.

These presses are widely used in combination with other types of Hydramic presses for multiple operation, saving the cost of one hydraulic power unit and motor. A shear in combination with the No. 610 notch-bend press or a stationary press makes an ideal arrangement. See pages 30-32.

Standard equipment includes angle iron die assembly, blade, and mitre block to mitre all angles up to 45°.

Jog and semiautomatic operation — Power units with remote pushbutton controls are recommended for maximum operating efficiency (see table on facing page). They include a selector switch which provides two types of operation:

A. *Jog* — Jog down and stop at any point. Jog up and stop at any point — limit switches maximum.

B. *Semiautomatic* — Press down button momentarily and ram will go down to limit switch and return to upper adjustable limit switch and stop. Push "up" button to reverse descending ram in case of trouble.

Cabinet for 606 shear provides a convenient means of mounting and makes a completely self-contained unit with the power system totally enclosed and the operating lever mounted on the outside. Specify 606A when cabinet is desired and indicate if casters are wanted for portability.

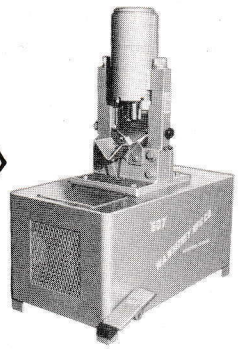

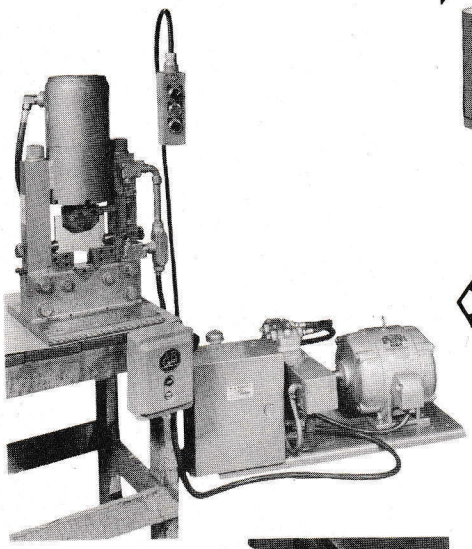

Model 606 shear with remote push-button-operated solenoid control. Specify either 600-S - 1-1/2-hp or 600-S-3-hp power unit.

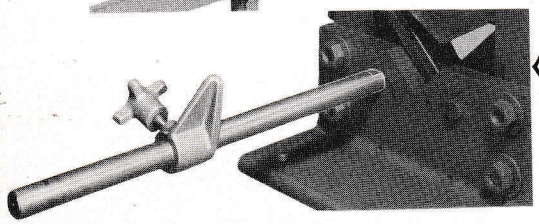

Adjustable material stop No. 606-74 for 606 is available for repetitive cutting of given lengths up to 18".

MODEL 609 — 45-ton capacity

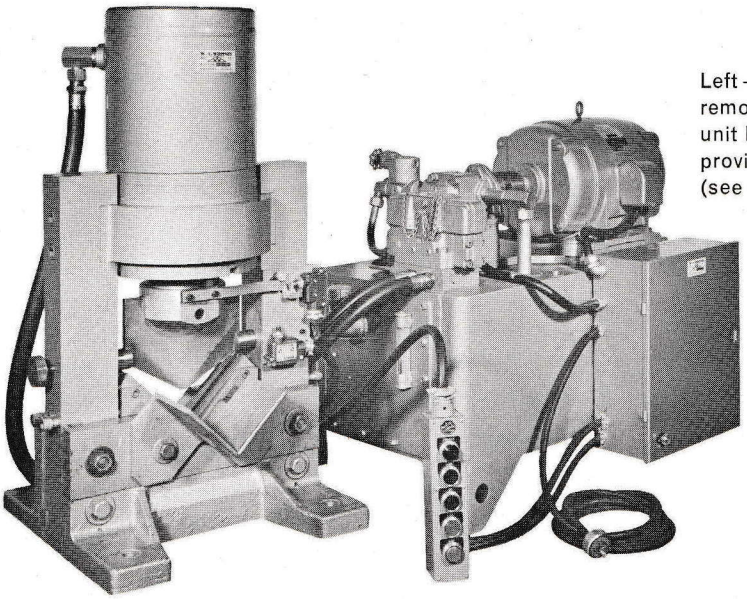

Left — No. 609 shear with remote pushbutton-operated power unit No. 600-S-10-hp which provides jog and full cycle control (see description on page 24).

Right — Hand lever power control unit No. 600-L-10-hp, provided at lower cost for jog control only.

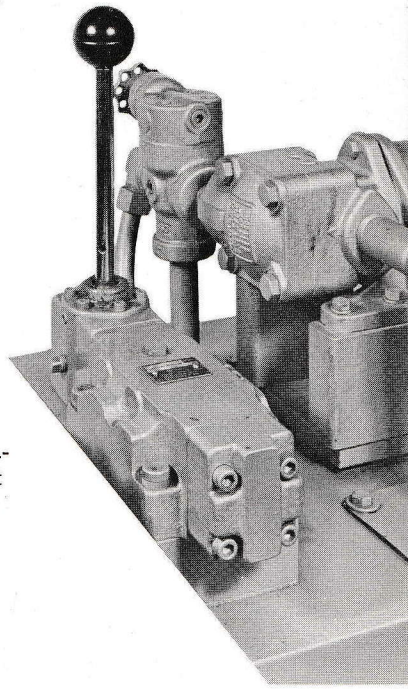

HYDRAMIC SHEAR SPECIFICATIONS		
Shear No.	606	609
Capacity	18 tons	45 tons
Stroke	1-3/4″	2-7/8″
Horsepower*	1-1/2 or 3	10
Cycle Time**	10 or 6 seconds	6 seconds
Height	26″	36-1/2″
Size of Base	12″ x 14″	19″ x 19″
Weight, Less Power Unit	251 lb	563 lb
Shears Angle Iron***	4 x 4 x 1/4″	6 x 6 x 1/2″
Shears Flats***	3/8 x 3-1/2″	5/8 x 6″
Shears Squares***	1/2″	1″
Shears Channel, Max. Leg. Ht.***	1/2″	1/2″
Shears Hollow Square Stock***	1″	1-3/4″

* Specify power unit from table below
** Cycle time 606 shear depends on power unit — see table below
*** Using std. angle iron die assembly with no change-over

POWER UNIT SPECIFICATIONS			
Horsepower	1-1/2	3	10
For Shear No.	606	606	609
Pedal or Lever Control*	No. 600-F-1-1/2 hp	No. 600-F-3 hp	No. 600-L-10 hp
Pushbutton Control*	No 600-S-1-1/2 hp	No. 600-S-3 hp	No. 600-S-10 hp
Shear Cycle Time	10 seconds	6 seconds	6 seconds
Motor	220/440-3-60	220/440-3-60	220/440-3-60
Height	13″	14-1/2″	36″
Size of Base	14″ x 24″	14″ x 34″	36″ x 24″
Wt. W/Motor, Less Oil	160 lb	224 lb	767 lb

* Specify power unit desired by number

THE ORIGINAL WAWhitney • Tooling for Models 606 and 609

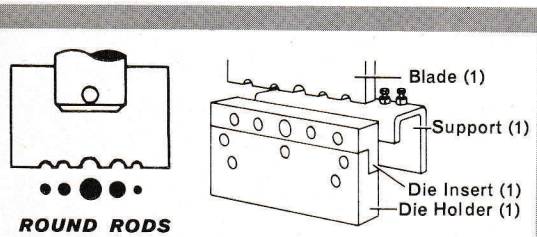

ROUND RODS
Single-cut

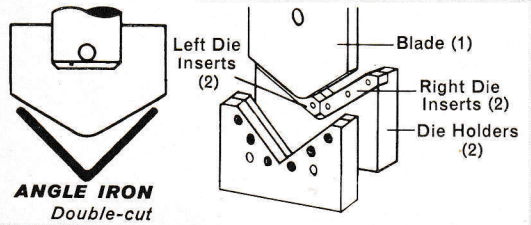

ANGLE IRON
Double-cut

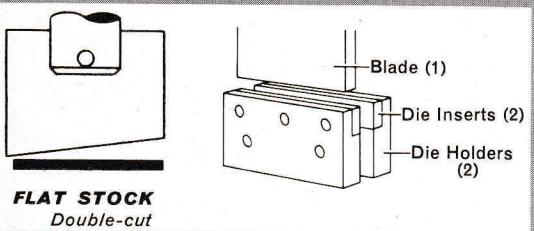

FLAT STOCK
Double-cut

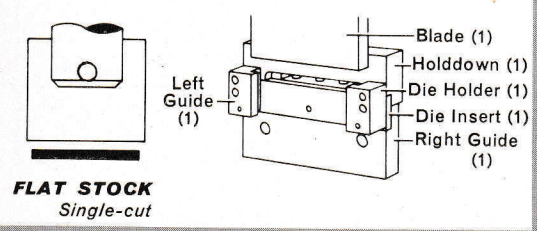

FLAT STOCK
Single-cut

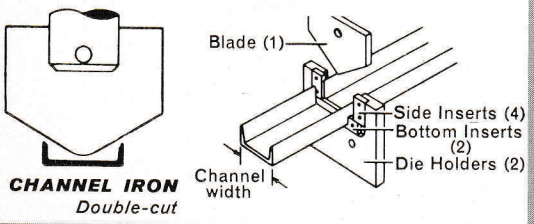

CHANNEL IRON
Double-cut

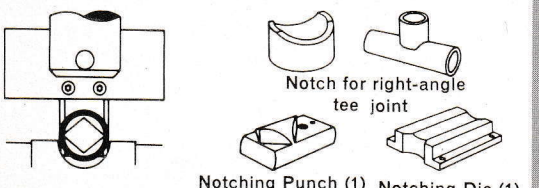

PIPE NOTCHING

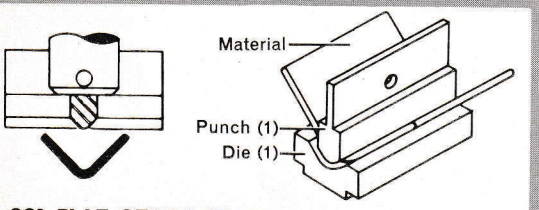

90° FLAT STOCK FORMING

RODS . . . for other than round, consult factory

Round rods. No. 606 assembly cuts five different sizes: 3/8″, 1/2″, 5/8″, 3/4″, and 7/8″. No. 609 assembly cuts five different sizes: 3/4″, 7/8″, 1″, 1-1/8″, and 1-1/4″.

Above based on hot rolled steel which has a plus tolerance. Where cold rolled has to be sheared with minimum distortion, a special blade and die with a minimum of clearance are required. Be sure to specify size and type of rod.

A rod support mounted on the back of the machine assures a square cut on both ends of the rod. There is no distortion or burring. For other sizes and shapes such as hex, square, etc., consult factory.

Angle iron. No. 606 shear capacity: 4″ x 4″ x 1/4″ straight shearing, and 3″ x 3″ x 1/4″ 45° mitred shearing. No. 609 shear capacity: 6″ x 6″ x 1/2″ straight shearing, 4″ x 4″ x 1/2″ 45° mitred shearing.

The standard 609 is furnished with *full clearance* inserts for 5/16″ to 1/2″ stock. *Close clearance* inserts are available to cut from 1/8″ to 3/8″. As an alternate to buying the close clearance inserts WAWhitney offers shims to place behind the standard inserts. Or, a 606 shear may be installed in combination with the 609 to provide a permanent setup with the proper clearance for the lighter gage materials.

Angle iron is double-cut removing a slug 3/8″ wide on 606 and 1/2″ wide on 609 which leaves no distortion or burr at either end of the stock. Angle iron support and mitre block not shown.

Flat stock — double cut. No. 606 shear capacity: 6″ x 5/16″. A 3/8″ wide slug is removed. No. 609 shear capacity: 9″ x 1/2″. A 1/2″ wide slug is removed. Every cut is made square without distortion or burrs, eliminating any secondary operations.

Flat stock — single cut. The single-cut flat stock shear assembly is designed to cut copper bus bar or equivalent material. No. 606 capacity: 4″ x 1/4″ and lighter. No. 609 capacity: 6″ x 1/2″ and lighter. Adjustable stock hold-down screws assure clean, square cut. Because no slug is removed, costly material is saved.

Channel iron. No. 606 shear capacity: channel widths 3/4″ through 2-1/2″ — see table. Double-cut removes 3/8″ slug. No. 609 shear capacity: channel widths of 3″ and 4″. Double-cut shearing removes 1/2″ slug. Channel iron can be 1/16″ over sizes listed in table.

Pipe notching — No. 606 shear only. One punch holder, die holder, and backup plate will handle all standard weight (schedule 40) pipe from 3/4″ through 2″. Different punches and dies for each pipe size are required as listed in the table on the right-hand page.

Change-over is fast and easy; cuts are clean and distortion-free for fitting two pipes of equal size at right angles.

90° Forming. No. 606 shear: Standard 6″ wide 90° forming punches and dies for material up to 3/8″ thick are stock items. No. 609 shear: Standard 9″ wide 90° forming punches and dies for material up to 3/4″ thick are stock items.

Allowance for spring back is required on special types of material, such as high carbon steel, stainless steel, and aluminum alloys. Standard dies are for mild steel and do not allow for spring back; therefore, specify the material to be formed.

PARTS NUMBERS — TOOLING FOR SHEARING RODS, ANGLE IRON, AND FLAT STOCK
Nos. 606 and 609 Hydramic Presses

PART NAME	ROUND RODS			ANGLE IRON			FLAT STOCK — SINGLE CUT			FLAT STOCK — DOUBLE CUT		
	No. req'd.	606	609	No. req'd.	606	609	No. req'd.	606	609	No. req'd.	606	609
Blade	1	606-85	609-212	1	606-8	609-4	1	606-87	609-214	1	606-72	609-200
Die Body	1	606-73-B	609-201-B	2	606-9	609-3	1	606-73-B	609-201-B	2	606-73-B	609-201-B
Die Insert	1	606-86	609-213-I	2 2	606-10-R 606-10-L	609-8-R 609-8-L	1	606-881	609-215-A	2	606-73-I	609-201-I
Support	1	606-86-A	609-213-S									
Right Guide							1	606-88-RG	609-215-R			
Left Guide							1	606-88-LG	609-215-L			
Holddown							1	606-88-H	609-215-B			

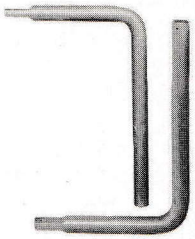

TOOLING FOR CHANNEL SHEARING
No. 606 Hydramic Press

Channel Width	Side Die Inserts 4/Set	Bottom Die Inserts 2/Set	Die Body 2/Set	Shear Blade
3/4″	606-42	606-2-D	606-2-B	606-41
7/8″	606-43			
1″	606-44			
1-1/8″	606-45			
1-1/4″	606-46	606-7-D	606-7-B	
1-1/2″	606-47			
1-3/4″	606-48			
2″	606-49			
2-1/2″	606-42		606-OB	
No. 609 Hydramic Press				
3″	609-203-A	609-203-I	609-203-B	609-202
4″	609-204-A			

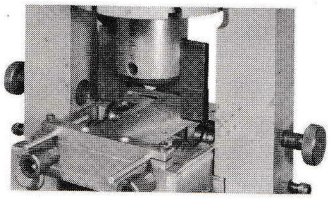

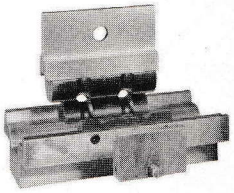

PARTS NUMBERS — TOOLING FOR PIPE NOTCHING
No. 606 Hydramic Press Only

Nominal Pipe Size In.	Outside Dia. In.	Wall Thickness	Punch Number	Die Number
3/4	1.050	.113	91-53P1	606-79-D
1	1.315	.133	91-54P1	606-80-D
1-1/4	1.660	.140	91-55P1	606-81-D
1-1/2	1.900	.145	91-56P1	606-82-D
2	2.375	.154	91-57P1	606-83-D

All Sizes	Punch Holder	Die Holder	Back-up Plate
	606-75	606-76	606-77

PARTS NUMBERS — TOOLING FOR 90° FLAT STOCK FORMING

Material Gage	Decimal	Die Number	Punch Number	Tonnage for 6″ Mild Steel
NO. 606 HYDRAMIC PRESS				
16	.0598	606-29-D	606-29-P	1.9
14	.0747	606-30-D	606-30-P	2.3
13	.0897	606-31-D	606-31-P	2.6
12	.1046	606-31-D	606-31-P	2.9
11	.1196	606-32-D	606-32-P	3.4
10	.1345	606-32-D	606-32-P	3.8
9	.1395	606-33-D	606-33-P	4.3
3/16	.187	606-34-D	606-34-P	5.6
1/4	.250	606-36-D	606-36-P	7.4
9/32	.281	606-37-D	606-37-P	8.4
5/16	.312	606-38-D	606-38-P	9.3
3/8	.375	606-40-D	606-40-P	14.2
1/2	.500	606-40.5-D	606-40.5-P	15.0 (4″ max. width)
NO 609 HYDRAMIC PRESS				**9″ Mild Steel**
1/4	.250	609-205-D	609-205-P	11.2
5/16	.312	609-206-D	609-206-P	14
3/8	.375	609-207-D	609-207-P	16.7
7/16	.437	609-208-D	609-208-P	19.8
1/2	.500	609-209-D	609-209-P	22.5
5/8	.625	609-210-D	609-210-P	28
3/4	.750	609-211-D	609-211-P	39.8

When ordering tooling for No. 606 and 609 HYDRAMIC presses, refer to descriptions on page 26.
Be sure to specify part numbers and quantity required.

THE ORIGINAL

WAWhitney • No. 610 Hydramic Coper-Notcher-Bender

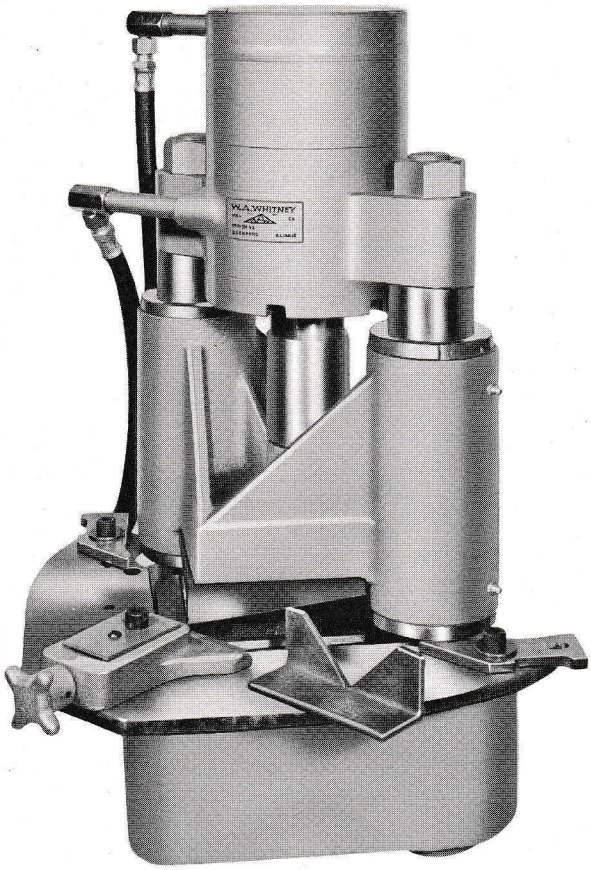

Left — Notching is performed on one side of the press.

Right — Bending is performed on the the other side of the press.

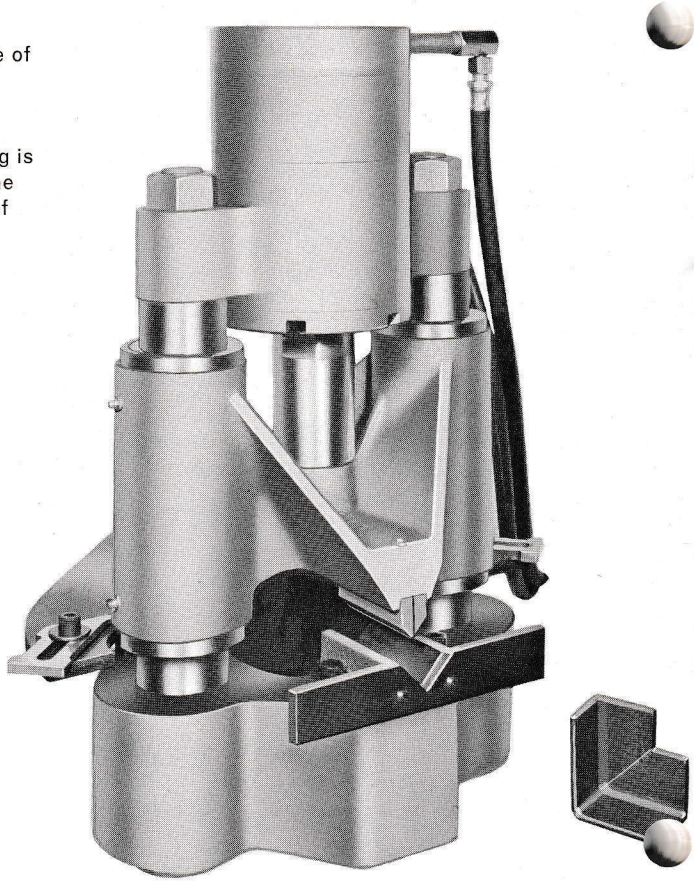

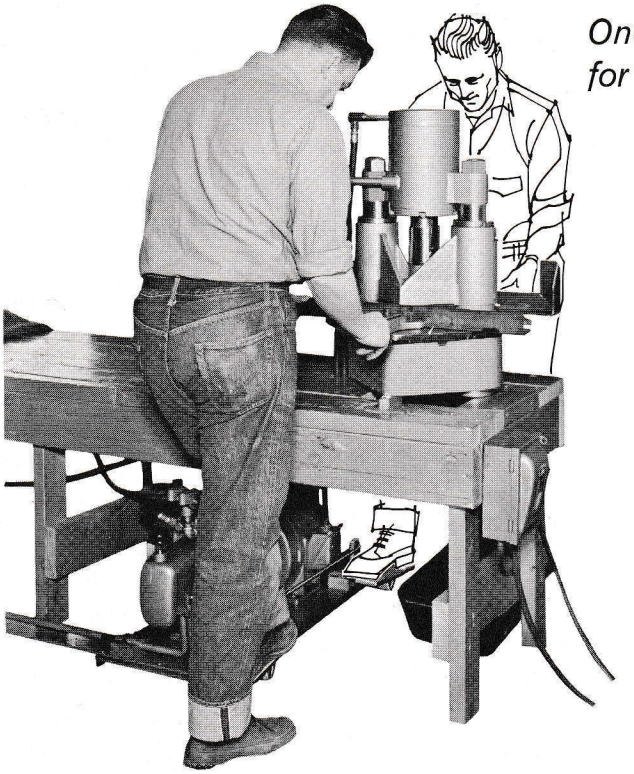

One operator handles notching and bending operations, working at either side of the press with equal ease. Gages are furnished for accurately locating work for notching and for coping angle iron and notching corners or edges of flat sheets.

One of the most useful machines a shop can own for metal fabricating work

Notching, bending, and coping of angle iron or flat stock are handled with maximum speed and safety on WAWhitney Model 610 Hydramic presses. Handling and operator fatigue are reduced materially because work is notched at one side of the press and then moved to the opposite side where a single smooth stroke of the ram bends at 90°.

High-quality tool steel blades and inserts are suitable for notching and coping stainless steel sheets. Lower die inserts are reversible for double tool life. Die clearance is easily adjusted for thin sheets requiring very close clearance up to large clearance (.020) for notching 1/4″ material.

The double-ended pedal control illustrated on the facing page enables the operator to work conveniently on either side of the press, keeping both hands on the work. The ram travels down when the operator steps on the pedal, stops when he removes his foot, moves upward when he presses the pedal the other way.

No. 610 presses are widely used in combination with No. 606 shears, or with No. 612 through 626 stationary presses.

OPERATION	EXAMPLE	CAPACITY
Notch and bend angle iron	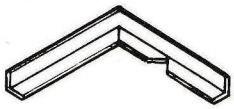	4 x 4 x 1/4″ (1/8″ and 3/16″ angle requires one notch, while 1/4″ angle requires a second notch to widen the "V" to obtain square flat bend.)
Cope flat sheets and/or notch	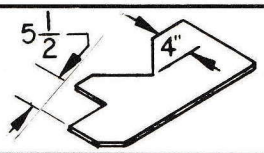	5-1/2 x 5-1/2 in 1/4″ sheet 4″ deep 90° notch in 1/4″ sheet
Cope angle iron and double cope	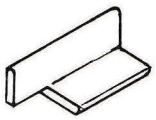	4 x 4 x 1/4″ (in 1/4″ thick angle several progressive cuts are required to overcome large inside radius in angle—approximately 1-1/4″ per cut. 1/8″ and 3/16″ angle can be coped in one stroke.)
Bend flat stock	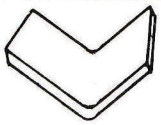	4″ x 1/4″

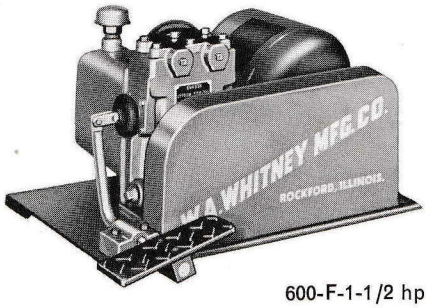

600-F-1-1/2 hp

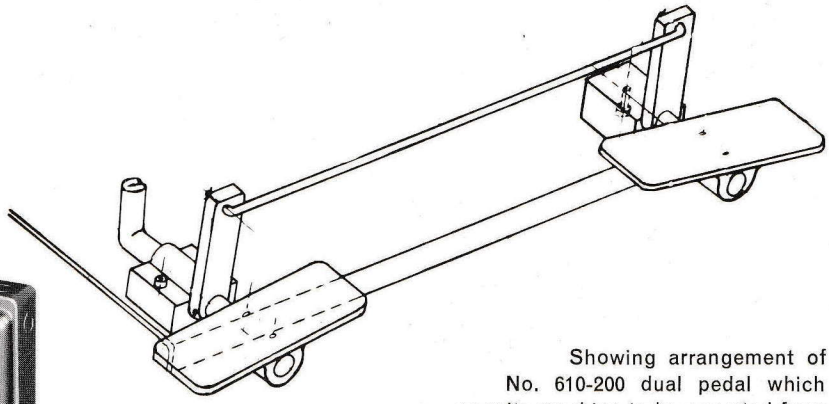

Showing arrangement of No. 610-200 dual pedal which permits machine to be operated from either side of the bench. Specify if for 1-1/2 or 3-hp power unit since mounting blocks are not interchangeable.

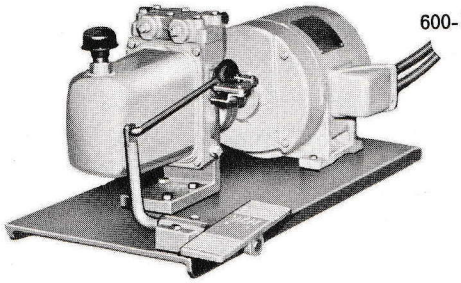

600-F-3 hp

Choice of power units. 1-1/2-hp unit operates press at seven strokes per minute. 3-hp unit operates press at twelve strokes per minute. Both power units provide same press capacity.

Specifications for No. 610 Hydramic Press

Capacity	18 ton
Stroke	1-3/8″
Cycle time — with 3-hp motor	12 strokes per minute
with 1-1/2 hp motor	7 strokes per minute
Height of press	30″
Size base of press	20″ x 20″
Size base of power unit — 3-hp motor	14″ x 34″
1-1/2-hp motor	14″ x 24″
Weight of press	450 lb
Weight of power unit — with 3-hp motor	224 lb
with 1-1/2-hp motor	160 lb

THE ORIGINAL

WAWhitney • Hydramic Presses

Combinations with a single power unit

Power Unit	Valving and Piping Required	Optional Control Feature	Slave Units	Stroke per Minute With Various Power Units		
				1-1/2 HP	3 HP	10 HP
600-F-1-1/2 hp (foot control) **600-F-3 hp (foot control)**	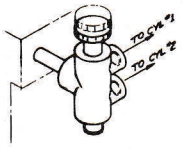 600-2-WS Selector valve	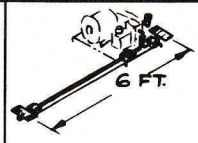 foot pedal extension 600-200	95 press*	20	36	—
			96 press*	20	36	—
			97 press*	20	36	—
			612 press	8	15	60
600-L-10 hp (hand lever control)	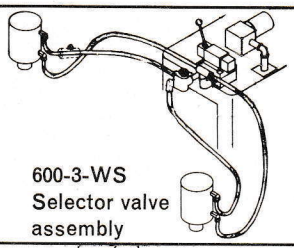 600-3-WS Selector valve assembly	None	613 press	8	15	60
			625 press	—	7	28
			626 press	—	7	28
600-S-10 hp (solenoid pushbutton control **600-L-10 hp (hand lever control)**	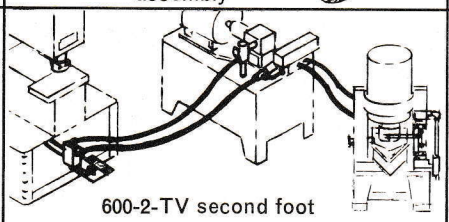 600-2-TV second foot control valve in tandem (no selector valve)***	None	606 shear	6	10	40
			609 shear	—	—	10
			610 coper notcher bender	6	10	40**

* Many of these presses are in use in the field, but now have been replaced by the No.#612 and 613.
** 600-313 speed (flow) control valve required to slow down bending operation for safety.
*** No. 600-4-TV solenoid tandem valve assembly available for (2) 609 or 606 shears both with limit switches but one pushbutton station (600-S-10, unit only).

By hooking up two or three Hydramic presses to a single power unit, a very broad range of metalworking operations can be performed with a minimum of floor space and a minimum of investment and equipment. Following is an explanation of the combinations possible and equipment required.

Limitations. WAWhitney 600 series Hydramic presses are operated at 1250 to 1500 psi hydraulic pressure, while the 700 series portables operate at 5000 psi. The low- and high-pressure machines cannot be operated in combination with a single power unit.

LOW-PRESSURE 600 SERIES

Two-way combinations — The power unit used governs the valving and piping required to make the combination. Any one of the slave units listed in the chart below can be used with any other in the chart. The right-hand columns show the power units which can be used and the strokes per minute with each. Where figures do not appear, the combination is not recommended (for example, the No. 625 press should not be used with a 1-1/2-hp power unit). Only one press can be operated at a time.

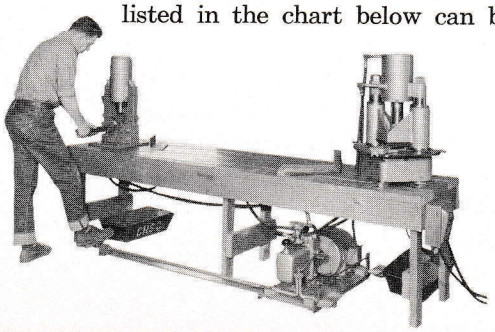

INSTALLATION OF TWO-WAY VALVES.

Installation of two-way valves — The above selector valve arrangements are designed for ease of setup in the field. Instructions for mounting are found in the machine manuals.

EXPLANATION OF SELECTOR AND CONTROL VALVES

1. No. 600-2-WS — for foot-controlled presses only. A standard single pedal can be used to operate both presses. This requires, however, that the presses be placed close together which is not convenient on many jobs. As an alternate, a dual pedal control extension with 6-ft pedals (No. 600-200 as shown in the table) can be provided. The dual pedal control is ideal for operating efficiency and economy.

To change from operation of one press to the other, it is simply necessary to push or pull the knob on the selector valve.

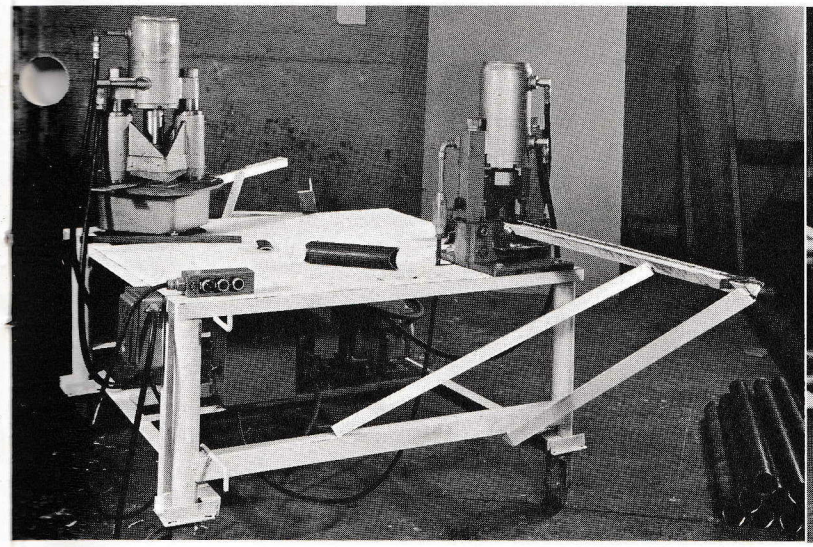

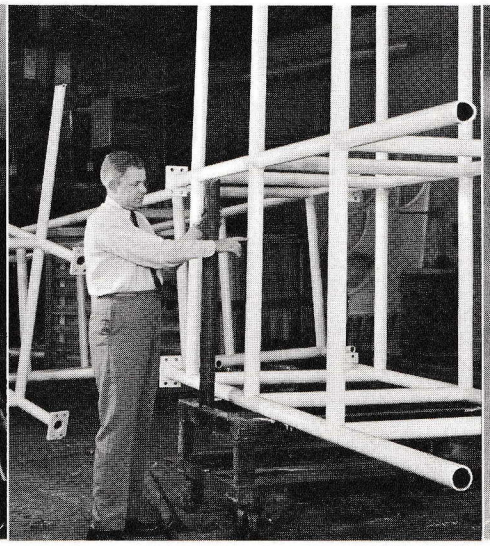

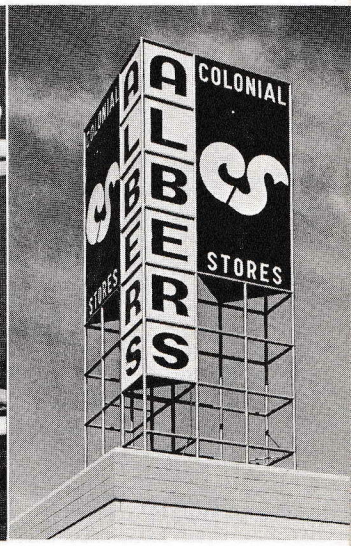

Above is shown a No. 610 Hydramic coper-notcher-bender hooked in combination to a single power unit with a No. 606 shear equipped with pipe-notching attachment as shown at the right side of the worktable. This installation at Hanover Neon Electric Corporation, Columbus, Ohio, is used to fabricate welded sign structures, such as shown above. Note single remote-control pushbutton station for both units. A selector valve is provided to switch from one unit to the other.

2. No. 600-3-WS selector valve — for hand-lever controlled shears and presses only. To switch from one press to the other it is simply necessary to push or pull the knob on the selector valve. The presses then are operated by a single hand-lever control valve.

3. No. 600-2-TV. This is a foot-controlled valve used on one of two presses. The other press is operated by the solenoid pushbutton control or hand-lever control. No selector valve is used. The operator simply goes from one press to the other, using the pedal on one and the pushbuttons or hand-lever control on the other, eliminating delay involved when a selector valve is used. The foot-controlled valve is ideal on punch presses (625-626) for full jog control.

HIGH-PRESSURE 700 SERIES COMBINATIONS

There are three sizes of standard power units available in the 700 series (1/2, 3, and 10 hp). Any one of the three can be used to operate more than one punching unit. However, hookup of two punch units to a small 1/2-hp power unit destroys the portable feature of the tool and is not recommended. Also, the cost of mounting the selector valve is more than half the total cost of the second power unit.

The high-pressure combination hookups can be arranged so that only one press can be operated at a time or so that two or more can be operated simultaneously:

Method A — two-way combinations with separate control box for each punch. Both units cannot operate at once, but there is no selector valve to turn. The operator can go directly from one punch unit to the other without delay.

Power Unit	Valving and Piping Required	Slave Units	Cycle Time in Seconds 3 hp	10 hp
700-S-3 hp	750-2-TV assembly	705	.6	.24
	Second 4-way valve mounted	710-712	1.2	.5
	Less hose assembly and control box	720-721-722	2.5	1
		730-731-732	3	1.2
700-S-10 hp		750-751	10	4
		770-771	15	6
		790-791	20	8

Method B — two- or three-way combinations with selector valve. A selector valve and selector switch are panel-mounted on top of the power unit for operating either two or three slave units. If only two slave units are purchased, the third set of ports is plugged so that a third unit can be added at a later date. The selector valve and switch must be turned when the operator goes from one punch to the other.

Power Unit	Valving and Piping Required	Slave Units	Cycle Time in Seconds 3 hp	10 hp
700-S-3 hp	750-3-WS assembly	705	.6	.24
	Two- or three-way combination	710-712	1.2	.5
	Three-way selector valve and 720 selector switch 730	720-721-722	2.5	1
		730-731-732	3	1.2
700-S-10 hp	Less hose assembly and control box	750-751	10	4
		770-771	15	6
		790-791	20	8

Method C — several punch units operating simultaneously. For gang-punching operations, several punching and/or notching units can be operated simultaneously from one power unit using a single pushbutton station (see illustration at the top of page 32). The presses may be different in size. For instance, two 20-ton No. 720 presses for punching small holes, and one 50-ton No. 750 press for large holes.

Combinations (continued)

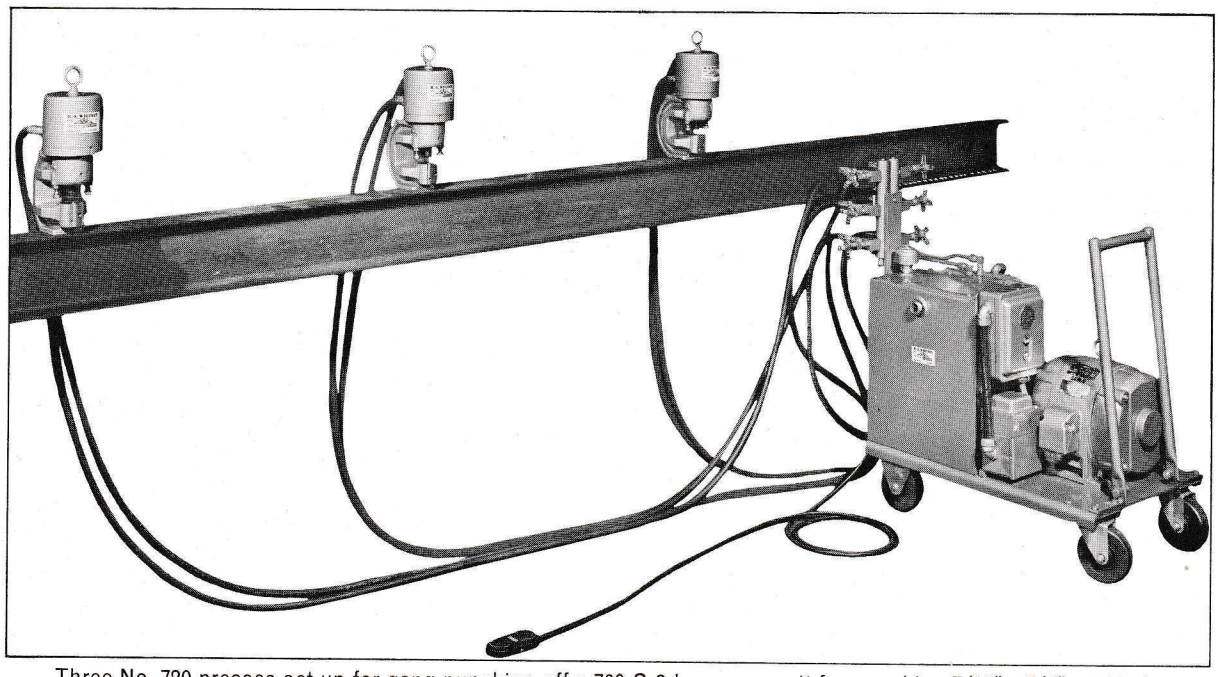

Three No. 720 presses set up for gang punching off a 700-S-3-hp power unit for punching 7/16" x 5/8" oval holes in angle iron. All three units are operated simultaneously from a single foot treadle control. Punch units are clamped to I-beam. Fast-action clamps are available for quick center distance adjustments.

Cycle time — The cycle time of several units acting simultaneously can be found by adding together the cycle times of each individual unit as shown in the tables on page 31.

The No. 700-S-1/2-hp power unit is limited to a maximum of 25-second cycle time due to the small oil reservoir. For example, only two 720's each having a 12-second cycle time total 24 seconds, or four 710's total 24 seconds, or eight 705's total 24 seconds.

When a 705, 710, 712, 720, 721, 722, 731, or 732 is used on either a 3-hp or 10-hp power unit, the ports must be modified to provide for the increased rate of flow.

A pair of shutoff valves makes up the manifold for each slave unit. For example if three 720 punch units are used there will be six shutoff valves which makes it possible to shut off two of the 720's and use only one as a portable tool. The shutoff valves work as selector valves, but are not too convenient due to the number of shutoff valves that have to be turned open and closed.

The standard control box, which includes two pushbuttons for jog UP and DOWN can be either mounted on one of the punching units or left unmounted for the customer to mount. A treadle-type foot switch is optional in lieu of the control box. If the length of cord is not specified, 12 feet is standard, and will be provided. Since limit switches cannot be mounted on the punch units, the only way to determine if all punches are through or retracted, is by eyesight. An experienced operator can tell just by the time he depresses each button. If production warrants, a cycle timer can be used which would be set to close the DOWN circuit for a certain time lapse and then automatically switch to close the UP circuit for a certain time lapse and then stop when all punches are up. Only a single "start cycle" button has to be momentarily pressed to punch all holes.

Power Units	Number of Slave Units	Manifold and Shutoff Valve Assembly Number
700-S-1/2 hp	2	710-MS-2
	3	710-MS-3
	4	710-MS-4
	5	710-MS-5
	6	710-MS-6
700-S- 3 hp 700-S-10 hp	2	750-MS-2
	3	750-MS-3
	4	750-MS-4
	5	750-MS-5
	6	750-MS-6
	7	750-MS-7
	8	750-MS-8

Shown below is the ordering information for two or more punch units to operate simultaneously:

a) Select punch units required.
b) Determine power unit by speed of operation desired.
c) Specify number of manifold shutoff valve assembly.
d) Specify hose lengths required for each punch unit (see hose specifications). One hose assembly is included with power unit.
e) Specify electrical punch controls desired.
   1. Standard pushbuttons mounted on one punch unit (jog cycle only). (Included in power unit price.)
   2. Foot switch treadle-type on cord (jog cycle only). (Included in power unit price in lieu of control box.)
   3. Other cycles quoted on application.

Section 3

THE ORIGINAL
W Whitney • Punches & Dies

INDEX . . . Page Numbers

Type of Punches & Dies	Hand Tool Punches & Dies	Portable Hydraulics Ball Brg. Punches & Dies
Round	34	36
Square	35	37
Oval	35	37
Rectangle	35	37
Button	34	—
Rivet	—	36

	No. 91 Hand-Operated Bench Press Tooling	No. 28 Style Power Press Tooling
Round	38, 43	44
Square	38	44
Oval	39	45
Rectangle	39	45
Type "P"	40	46
Hexagon	40	46
Corner Rounding	40	46
Corner Notching 90°	40	—
Comb. Notch & Cope	40	46
Keyhole	41	47
Knockout, Electrical	41	47
Louvre	41	47
Angle Iron Notch 30° 45°	41	—
60° 90°	41	—
Pipe Notching	42	—
Receptacle Union	42	—
Slotting	42	—
Trimming & Parting	42	47
Unistrut Frame Punching	43	—
Accessories:		
Die Shoes	38, 43	48
Strippers	38	—
Punch Adapters	—	48
Die Adapters	—	48

THE ORIGINAL

Whitney • Tooling for Hand Tools

HAND TOOL PUNCHES AND DIES ROUND

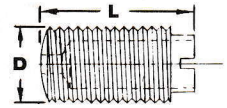

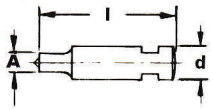

Whitney Tool No.	Standard Stock Sizes: Fraction Round										Specials: Decimal Round			
	Die No.	D	L	Punch No.	d	l	Min. Max.	Incre.	Punch Price	Die Price	Min. Max.	Incre.	Punch Price	Die Price
1	1	1″	2″	1	9/16	2-3/8	1/16 9/16	1/64th	$ .95	$ .95	.062 .562	Any decimal or drill size	$3.25	$3.25
2 Std	2	7/8	1-3/4	2	1/2	2-3/8	1/16 1/2	1/64th	.90	.90	.062 .500		3.00†	3.00
2 Close Corner	6	9/16	1-5/8	2	1/2	2-3/8	1/16 11/32	1/64th	.90	.85	.062 .343		3.00†	2.90
2 Channel	2	7/8	1-3/4	2	1/2	2-3/8	1/16 1/2	1/64th	.90	.90	.062 .500		3.00†	3.00
2 Channel Close Corner	6	9/16	1-5/8	2	1/2	2-3/8	1/16 11/32	1/64th	.90	.85	.062 .343		3.00†	2.90
4B	4B	7/16	3/4	4B	5/16	1-7/32	1/16 5/16	1/64th	.50	.50	.062 .312		2.40	2.40
5 JR	5	7/16	3/4	5	9/32	1-1/4	1/16 9/32	1/64th	.50	.50	.062 .281		2.40	2.40
6	6	9/16	1-5/8	2	1/2	2-3/8	1/16 11/32	1/64th	.90	.85	.062 .343		3.00†	2.90
7	7	3/4	1-7/16	7	7/16	1-15/16	1/16 7/16	1/64th	.70	.60	.062 .437		3.00	2.90
7-1/2	7	3/4	1-7/16	2	1/2	2-3/8	1/16 7/16	1/64th	.90	.60	.062 .437		3.00	2.90
8B	8B	11/16	1-1/4	7	7/16	1-15/16	1/16 7/16	1/64th	.70	.70	.062 .437		3.00	2.90
88, 8 Imp	2	7/8	1-3/4	2	1/2	2-3/8	1/16 1/2	1/64th	.90	.90	.062 .500		3.00†	3.00
16	28-1-1/4	1-1/4	5/8 Not threaded	16	9/16	3-1/8	1/16 9/16	1/64th	.95	1.00	.062 .562		3.40	3.75
17	28-1-1/4	1-1/4	5/8 Not threaded	17	9/16	3-13/16	1/16 9/16	1/64th	1.00	1.00	.062 .562		3.70	3.75
PK OX	5	7/16	3/4	OX	*17/64	*1-1/8	3/32 17/64	1/32	.60	.60	.093 .264		—	—
PK XX	XX	3/4	1-1/4	XX	**1-1/4	**5/16	1/8 7/16	1/32	.70	.70	.125 .437		—	—
PK XX	XX	3/4	1-1/4	XX	***1-3/8	***5/16	15/32 17/32	1/32	.90	.90	.438 .531		—	—

* Has 5/16 dia. head ** Has 1/2 dia. shoulder *** Has 17/32 dia. shoulder † Nos. 1 thru 60 and A thru Z DRILL SIZE punches — $1.00

ORDERING INFORMATION

(A) Be sure to specify the thickness and type of material to be punched so proper punch and die clearance can be allowed.
Recommended clearance:

38 Ga. thru 25 Ga mild steel use standard fraction punch and decimal (close fit) die
24 Ga. thru 12 Ga. mild steel use standard fraction punch and die (.005 — .008 std.)
10 Ga. thru 3/16 mild steel use standard fraction punch and 1/64 larger die
7/32 thru 1/4 mild steel use standard fraction punch and 1/32 larger die.

BUTTON PUNCHES AND DIES

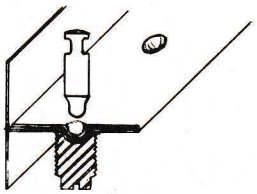

Tool No.	Gage of Material (based on 3 thicknesses)								Price Per Set
	30	28	24	22	20	18	16	14	
4B	3/16	3/16	7/32	7/32					$3.00
8B	3/16	3/16	7/32	1/4	1/4	1/4	7/32		3.10
6	3/16	3/16	7/32	1/4	1/4	1/4	1/4	1/4	3.20
2	3/16	3/16	7/32	1/4	1/4	1/4	1/4	1/4	3.20

Prices may be higher west of the Rocky Mountains and outside of the United States because of duty and freight.

SQUARE—OVAL—RECTANGLE

Whitney Tool No.	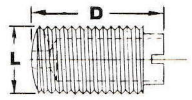			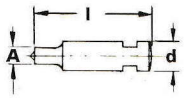			Specials 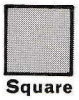 Square			Specials 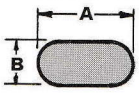 Oval			Specials 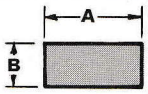 Rectangle	
	Die No.	D	L	Punch No.	d	l	Min. Max.	Incre.	Price Per Set	"A" Max.	B	Price Per Set	Max. Across Corners	Price Per Set
1	1	1	2	1	9/16	2-3/8	1/8 3/8	1/32	$11.50	9/16		$13.60	9/16	$14.70
2 Std	2	7/8	1-3/4	2	1/2	2-3/8	1/8 11/32	1/32	8.25	1/2		9.70	1/2	8.25
2 Close Corner	6	9/16	1-5/8	2	1/2	2-3/8	1/8 1/4	1/32	12.00	11/32		13.60	11/32	14.70
2 Channel	2	7/8	1-3/4	2	1/2	2-3/8	1/8 11/32	1/32	8.25	1/2	Any width from 3/32 up to "A"	9.70	1/2	8.25
2 Channel Close Corner	6	9/16	1-5/8	2	1/2	2-3/8	1/8 1/4	1/32	12.00	11/32		13.60	11/32	14.70
4B	4B	7/16	3/4	4B	5/16	1-7/32	1/8 7/32	1/32	6.25	5/16		7.50	5/16	6.25
5 JR	5	7/16	3/4	5	9/32	1-1/4	1/8 3/16	1/32	6.25	9/32		7.50	9/32	6.25
6	6	9/16	1-5/8	2	1/2	2-3/8	1/8 1/4	1/32	12.00	11/32		13.60	11/32	14.70
7	7	3/4	1-7/16	7	7/16	1-15/16	1/8 5/16	1/32	7.50	7/16		10.00	7/16	7.50
7-1/2	7	3/4	1-7/16	2	1/2	2-3/8	1/8 5/16	1/32	7.50	7/16		10.00	7/16	7.50
8B	8B	11/16	1-1/4	7	7/16	1-15/16	1/8 5/16	1/32	8.50	7/16		10.00	7/16	7.50
88, 8 IMP	2	7/8	1-3/4	2	1/2	2-3/8	1/8 11/32	1/32	8.25	1/2		9.70	1/2	8.25
16	28-1-1/4 Not threaded	1-1/4	5/8	16	9/16	3-1/8	1/8 3/8	1/32	12.45	9/16		15.50	9/16	12.50
17	28-1-1/4 Not threaded	1-1/4	5/8	17	9/16	3-13/16	1/8 3/8	1/32	12.45	9/16		15.50	9/16	12.50

* Where "B" is from 1/32 up to 3/32, double the price shown.

ORDERING INFORMATION

(A) Be sure to specify the thickness and type of material to be punched so proper die clearance can be allowed. Standard clearance .005 — .008.

(B) Oval and rectangle punches and dies can be supplied with the long dimension (A) positioned left to right (LR) or front to back (FB). If not specified, they will be left to right (LR).

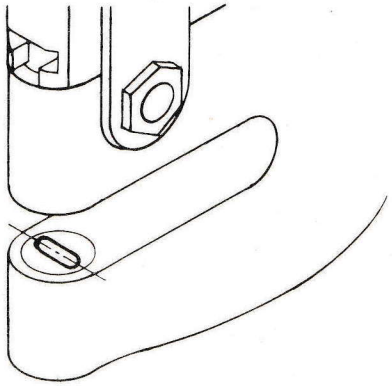

Left to right "LR"

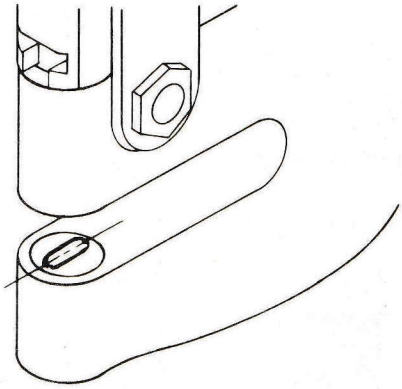

Front to back "FB"

Prices may be higher west of the Rocky Mountains and outside of the United States because of duty and freight.

PORTABLE HYDRAULIC AND BALL-BEARING PUNCHES ROUND

Standard Stock Sizes

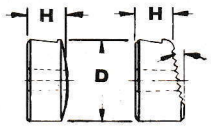

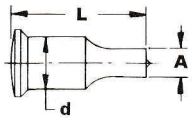

Round

Whitney Tool No.	Die No.	D	H	Punch No.	d	L	Min. Max.	Incre.	Punch Price	Std. Die Price	Bevel Serrated Die Price
10, 11, 12	10	13/16	15/32	10	1/2	1-7/32	3/32 1/2*	1/64	$ .60	$ .60	$7.85
18, 20, 24, 25	20	1-1/4	5/8	20	11/16	1-3/4	1/16 11/16**	1/64	1.00	1.00	8.75
20 CTW	10	13/16	15/32	20	11/16	1-3/4	1/16 9/16	1/64	1.00	.60	7.85
26, 27, 40	40	2-1/8	1	40	1	2-7/16	1/8 1	1/32	2.75	3.65	9.20
705	10	13/16	15/32	10	1/2	1-7/32	3/32 1/2*	1/64	.60	.60	7.85
710	20	1-1/4	5/8	20	11/16	1-3/4	1/8 11/16**	1/64	1.00	1.00	8.75
720	20	1-1/4	5/8	20	11/16	1-3/4	1/8 11/16**	1/64	1.00	1.00	8.75
721	20	1-1/4	5/8	20	11/16	1-3/4	1/8 11/16**	1/64	1.00	1.00	8.75
730	40	2-1/8	1	40	1	2-7/16	1/8 1***	1/32	2.75	3.65	9.20
731	20	1-1/4	5/8	40	1	2-7/16	1/8 13/16	1/32	2.75	1.00	8.75
750	40	2-1/8	1	40	1	2-7/16	1/8 1***	1/32	2.75	3.65	9.20
751	40	2-1/8	1	40	1	2-7/16	1/8 1***	1/32	2.75	3.65	9.20
770	40	2-1/8	1	770	1-1/4	3-1/8	7/32 1-1/16	1/32	6.10	3.65	9.20
771	40	2-1/8	1	770	1-1/4	3-1/8	7/32 1-1/16	1/32	6.10	3.65	9.20
790	40	2-1/8	1	770	1-1/4	3-1/8	7/32 1-1/16	1/32	6.10	3.65	9.20
791	40	2-1/8	1	770	1-1/4	3-1/8	7/32 1-1/16	1/32	6.10	3.65	9.20

* 17/32 and 9/16 dia. P & D (Punch $1.30, Die $1.30). Requires special #10 coupling nut $1.65.
** 3/4 and 13/16 dia. P & D (Punch $1.65, Die $1.65). Requires #20 split coupling nut $2.20.
*** 1-1/16 dia. P & D (Punch $5.80, Die $3.65). Requires #40 split coupling nut $4.80.
Standard coupling nuts #10 — $1.00, #20 — $1.75, #40 — $2.90, #770 — $6.40.

ORDERING INFORMATION

(A) Be sure to specify the type and thickness of material so proper punch and die clearance can be allowed. Standard clearance of die #10 — .020/.025, #20 — .025/.030, #40 — .030/.035. The difference between the punch and die diameters should be approximately 10% of material thickness.

(B) Bevel serrated dies are required for punching flanges of American Standard channels and I-beams. They cannot be used for punching flat work. Unless bevel serrated is spelled out, standard dies will be shipped.

RIVET SETS

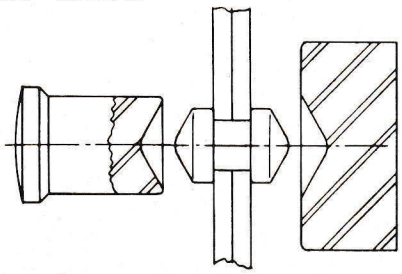

Standard rivet sets produce the modified cone head which has a 120° included angle. Standard round head rivets are used and usually 1-1/2 times the rivet diameter plus the material thickness can be used to determine the proper length. See catalog page 17 for tonnage.

No.	Punch Price	Die Price
10 RMC	$ 6.35	$ 5.15
20 RMC	12.10	9.90
40 RMC	14.60	11.90
770 RMC	20.40	—

ORDERING INFORMATION

1. Give tool number and punch and die number
2. Give rivet diameter (set required for each size)
3. Be sure customer can adjust and check hydraulic pressure

Prices may be higher west of the Rocky Mountains and outside of the United States because of duty and freight.

SQUARE—OVAL—RECTANGLE

	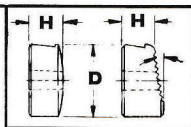			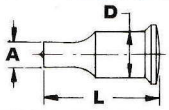			Specials Square				Specials 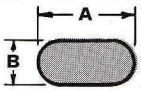 Oval				Specials 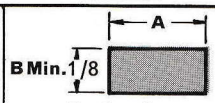 Rectangle		
Whitney Tool No.	Die No.	D	H	Punch No.	D	L	A Min. Max.	Incre.	Price Per Std. Die Set	Price Per Bevel Ser. Set	A Max.	B	Price Per Std. Die Set	Price Per Bevel Ser. Set	Max. Across Corner	Price Per Std. Die Set	Price Per Bevel Ser. Set
10-11-12	10	13/16	15/32	10*	1/2	1-3/8	1/8 11/32	1/32	$ 9.50 ****	$14.75 ****	1/2		$10.50 ****	$15.75 ****	1/2	$ 9.50 ****	$14.75 ****
18-20	20	1-1/4	5/8	20**	11/16	1-15/16	3/16 15/32	1/32	16.95 ****	22.45 ****	11/16		21.00 ****	26.50 ****	11/16	17.00 ****	22.50 ****
24-25	20	1-1/4	5/8	24**	11/16	2-1/4											
20 CTW	10	13/16	15/32	20**	11/16	1-15/16	3/16 11/32	1/32	13.25 ****	18.50 ****	1/2		15.75 ****	21.00 ****	1/2	13.25 ****	18.50 ****
26-27-40	40	2-1/8	1	40***	1	2-13/16	1/4 11/16	1/32	21.50 ****	27.50 ****	1		25.50 ****	31.50 ****	1	21.50 ****	27.50 ****
705	10	13/16	15/32	710	1/2	1-7/32	1/8 11/32	1/32	10.50	15.75	1/2	Any width from 1/8 up to "A"	11.50	15.85	1/2	10.50	15.75
710	20	1-1/4	5/8	720	11/16	1-3/4	3/16 15/32	1/32	17.95	23.45	11/16		22.00	27.50	11/16	18.00	23.50
720	20	1-1/4	5/8	720	11/16	1-3/4	3/16 15/32	1/32	17.95	23.45	11/16		22.00	27.50	11/16	18.00	23.50
721	20	1-1/4	5/8	720	11/16	1-3/4	3/16 15/32	1/32	17.95	23.45	11/16		22.00	27.50	11/16	18.00	23.50
730	40	2-1/8	1	740	1	2-7/16	1/4 11/16	1/32	22.50	28.50	1		26.50	32.50	1	22.50	28.50
731	20	1-1/4	5/8	740	1	2-7/16	1/4 9/16	1/32	19.95	25.45	13/16		22.50	28.50	13/16	19.00	24.50
750	40	2-1/8	1	740	1	2-7/16	1/4 11/16	1/32	22.50	27.50	1		26.50	32.50	1	22.50	28.50
751	40	2-1/8	1	740	1	2-7/16	1/4 11/16	1/32	22.50	27.50	1		26.50	32.50	1	22.50	28.50
770	40	2-1/8	1	770	1-1/4	3-1/8	1/4 3/4	1/32	26.20	32.20	1-1/16		32.30	38.30	1-1/16	31.80	37.80
771	40	2-1/8	1	770	1-1/4	3-1/8	1/4 3/4	1/32	26.20	32.20	1-1/16		32.30	38.30	1-1/16	33.80	39.80
790	40	2-1/8	1	770	1-1/4	3-1/8	1/4 3/4	1/32	26.20	32.20	1-1/16		32.30	38.30	1-1/16	33.80	39.80
791	40	2-1/8	1	770	1-1/4	3-1/8	1/4 3/4	1/32	26.20	32.20	1-1/16		32.30	38.30	1-1/16	33.80	39.80

ORDERING INFORMATION

(A) * Guide stripper, spacers, and screws required for each size punch $6.50
** Guide stripper, spacers, and screws required for each size punch $9.50
*** Guide stripper, spacers, and screws required for each size punch $11.50
**** Does not include guide stripper, etc.

(B) Be sure to specify the type and thickness of material so proper clearance can be allowed. Standard clearance of die: #10 — .020/.025, #20 — .025/.030, #40 — .030/.035. The difference between the punch and die overall should be approximately 10% of material thickness.

(C) Where *guide stripper* or bevel serrated die is used, be sure to specify position LR or FB. If not specified, it will be LR. (See p. 35)

(D) Bevel serrated dies are required for punching flanges of American Standard channels and I-Beams. They cannot be used for punching flat work. Unless bevel serrated is spelled out, standard dies will be shipped.

Prices may be higher west of the Rocky Mountains and outside of the United States because of duty and freight.

THE ORIGINAL

Whitney • Tooling

Standard 91 Tooling for 91, 92, 93, 94 Manual Presses and 95, 96, 97, 612, 613 Hydraulic Presses

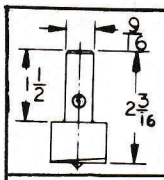

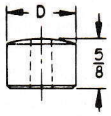

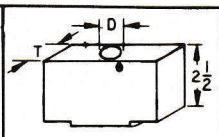

Punch No.	Die No.	D	Die Shoe No.	D	T	Stock Sizes: Fraction Round Min. Max.	Incre.	Punch Price	Die Price	Specials: Decimal Round Min. Max.	Incre.	Punch Price	Die Price	Stock Sizes: Square Min. Max.	Incre.	Punch Price	Die Price
91	91 - 7/8	7/8	91 - 7/8	7/8	1	1/16 5/8	1/32	$.95	$.95	.062 .625	Any decimal or drill size	$4.95	$4.95	1/8 13/32	1/32 *	$8.50	$8.50
						5/64 39/64	1/64	1.90	1.90								
	91 - 1-3/16	1-3/16	91 - 1-3/16	1-3/16	1-1/2	21/32 7/8	1/32	1.90	1.90	.626 .875		5.35	5.35	7/16 19/32	1/32 *	9.80	9.80
						41/64 55/64	1/64	3.80	3.80								
	91 - 1-15/16	1-15/16	91 - 1-15/16	1-15/16	3	15/16 1-1/2	1/16	2.60	2.60	.876 1.500		6.20	6.20	5/8 1	1/16 *	13.10	13.10
						29/32 1-15/32	1/32	4.40	4.40								
						57/64 1-31/64	1/64	5.20	5.20								
	91 - 2-7/16	2-7/16	91 - 2-7/16	2-7/16	3	1-9/16 2	1/16	3.30	3.30	1.501 2.000		8.40	8.40	1-1/16 1-3/8	1/16 *	16.10	16.10
						1-17/32 1-31/32	1/32	5.30	5.30								
						1-33/64 1-63/64	1/64	7.95	7.95								

* For nonstock size add 20%

2-1/16 and over see Page 43

ORDERING INFORMATION

(A) Be sure to specify the thickness and type of material to be punched so proper punch and die clearance can be allowed. Recommended clearance:

38 Ga. thru 25 Ga. mild steel use standard fraction punch and decimal (close fit) die
24 Ga. thru 10 Ga. mild steel use standard fraction punch and die (.005 — .008 std.)
5/32 thru 3/16 mild steel use standard fraction punch and 1/64 larger die
7/32 thru 1/4 mild steel use standard fraction punch and 1/32 larger die

(B) Two sets of strippers are required on the 91 thru 97 presses to cover up through 2" dia. Up through 1" use narrow strippers $4.20 per set (usually provided with the machine). 1" through 2" use wide strippers $6.30 per set.

(C) When punching stainless or spring steel consistently, high-speed steel punches and dies should be used to receive good punch and die life. Prices on application.

(D) Rectangles, ovals, and other irregular punches and dies will be spotted for left to right mounting unless specified for front to back.

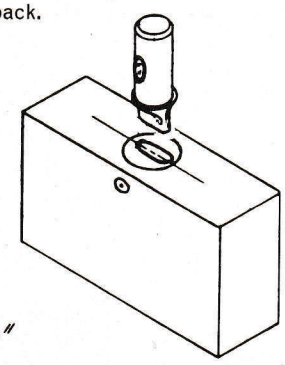

LEFT TO RIGHT "LR"

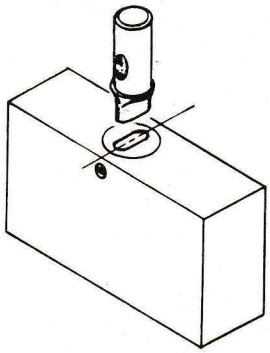

FRONT TO BACK "FB"

Prices may be higher west of the Rocky Mountains and outside of the United States because of duty and freight.

No. 91 TOOLING
IRREGULAR SHAPES

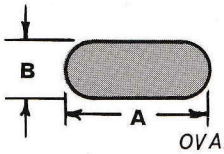

OVAL

"X" STANDARD ☐ SPECIAL

Box with "X" indicates a size carried in stock at price shown — for nonstock sets add 20% to price shown.

WHERE "B" IS FROM 1/32 UP TO 3/32 DOUBLE THE PRICE SHOWN

Die Size		#91 - 7/8 OD				#91 - 1-3/16 OD		#91 - 1-15/16 OD			#91 - 2-7/16 OD	
Price		Punch $10.35		Die $10.35		Punch $12.70	Die $12.70	Punch $15.15		Die $15.15	Punch $21.40	Die $21.40
Length "A"		1/4	3/8	1/2	5/8	3/4	7/8	1	1-1/4	1-1/2	1-3/4	2
"B" Width	1/8	X	X	X	X	X	X	X				
	3/16	X	X	X	X	X	X	X				
	7/32	X	X	X	X	X	X	X				
	1/4		X	X	X	X	X	X				
	9/32		X	X	X	X	X	X				
	5/16		X	X	X	X	X	X				
	3/8			X	X	X	X	X				
	1/2				X	X	X	X				
	5/8											
	3/4											
	1											

For larger sizes see page 43

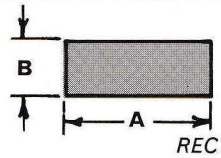

RECTANGLE

"X" STANDARD ☐ SPECIAL

Box with "X" indicates a size carried in stock at price shown. For nonstock sets add 20% to price shown. Where "B" is from 1/32 up to 3/32 double the price shown.

Die Size		#91 - 7/8 OD			#91 - 1-3/16 OD		#91 - 1-15/16 OD				#91 - 2-7/16 OD	
Price		Punch $12.20		Die $13.65	Punch $13.35	Die $14.15	Punch $15.15		Die $17.15		Punch $21.50	Die $27.75
Length "A"		1/4	3/8	1/2	5/8	3/4	7/8	1	1-1/8	1-1/4	1-1/2	1-3/4
"B" Width	1/8			X				X			X	
	3/16			X				X			X	
	1/4			X		X		X			X	
	5/16											
	3/8					X		X			X	
	7/16											
	1/2					X		X			X	
	5/8											
	3/4											
	7/8											
	1											
	1-1/8											

See preceding page for ORDERING INFORMATION
For larger sizes see page 43

Prices may be higher west of the Rocky Mountains and outside of the United States because of duty and freight.

No. 91 TOOLING

TYPE "P"

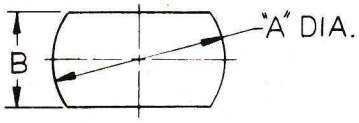

SPECIAL

Type "P" punch and die sets are not carried in stock due to the many combinations of sizes. Specify type and thickness of material to be punched.

"A" Max. Diameter	5/8	7/8	1-1/2	2
"B" Flats	1/8 to 5/8	1/8 to 7/8	1/8 to 1-1/2	1/8 to 2
#91 Die Size	91 - 7/8 O.D.	91 - 1-3/16 O.D.	91 - 1-15/16 O.D.	91 - 2-7/16 O.D.
Price per set (P & D)	37.90	46.45	57.50	74.50

HEXAGON

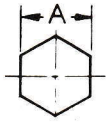

SPECIAL

Hexagon punch and die sets are not carried in stock. Hex punches are made with "A" having a +.002−.000 tolerance with .005 to .008 clearance. Specify type and thickness of material to be punched.

"A" Max. Hex	1/2	3/4	1-1/4	1-3/4
#91 Die Size	91 - 7/8 O.D.	91 - 1-3/16 O.D.	91 - 1-15/16 O.D.	91 - 2-7/16 O.D.
Price per set (P & D)	32.50	37.50	46.75	57.80

CORNER ROUNDING

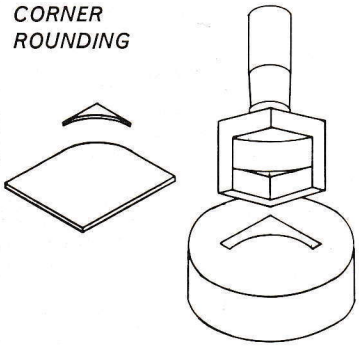

SPECIAL

Corner rounding punches and dies are usually in factory stock. These are used to round corners of sheets and plates. The heel on the punch guides the punch accurately and locates the workpiece. Specify type and thickness of material to be punched.
* has 3/4 shank

Size of Radius	1/16	1/8	3/16	1/4	3/8	1/2	5/8	3/4	1	1-1/2	2	2-1/2*
#91 Die Size	91 - 1-3/16 O.D.					91 - 1-15/16 OD			2-7/16	Die/die shoe ass'y. Front Delivery		
Maximum Thickness of Mat'l.	16 Ga.	14 Ga.	10 Ga.	10 Ga.	3/16	1/4	1/4	1/4	1/4	3/16	10 Ga.	10 Ga
Price per set (P & D)	57.50					83.40			96.60	132.40		156.00

CORNER NOTCHING

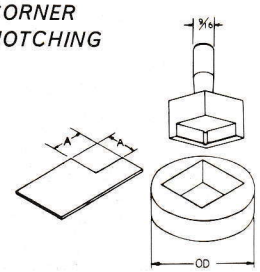

SPECIAL

Corner notching punches and dies are not stock items. The heel on the punch guides the punch accurately eliminating rapid tool wear and the guide also gages the workpiece. Sizes other than shown can be specified.

"A" Size of notch	3/8	3/4	1-1/8
#91 Die size	91 - 1-3/16 O.D.	91 - 1-15/16 O.D.	91 - 2-7/16 O.D.
Price per set (P & D)	48.80	60.20	68.75

COMBINATION NOTCH & COPE

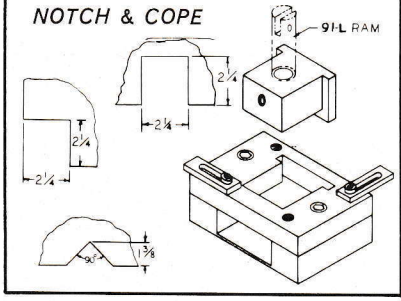

SPECIAL

The die set fits 91 thru 97 presses, and it has many applications in sheet metal and model shops for operations as shown. With use of the 91L press ram it becomes a very rugged tool. The 91L press ram is easily installed in a matter of minutes in your present machine.

Combination Notch and Cope Die Set.....$152.00
Including die shoe but less 91L ram.
#91L Press Ram.....$ 12.20

Prices may be higher west of the Rocky Mountains and outside of the United States because of duty and freight.

No. 91 TOOLING

KEYHOLE

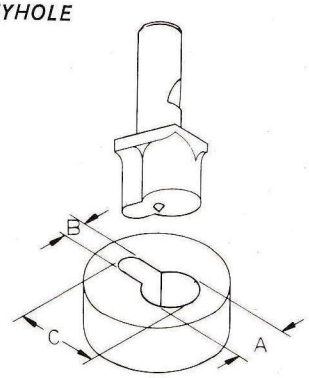

SPECIAL

Keyholes punched in sheet metal parts allow assembly without removing the screw. The sizes shown will take standard pan head screws, round head screws, and sheet metal screws.

Size of Screw	#3 - #5	#6 - #10	#12 - 1/4	5/16	3/8	7/16	1/2	5/8
"A"	9/32	13/32	17/32	21/32	25/32	13/16	7/8	1-1/16
"B"	9/64	13/64	9/32	11/32	13/32	15/32	17/32	21/32
"C"	7/16	5/8	7/8	1	1-1/4	1-3/8	1-1/2	1-5/8
91 Die Size	7/8	1-3/16	#91 - 1-15/16 O.D.				91 - 2-7/16 O.D.	
Price per Set	47.50	53.00	61.30				73.80	

KNOCKOUT ELECTRICAL

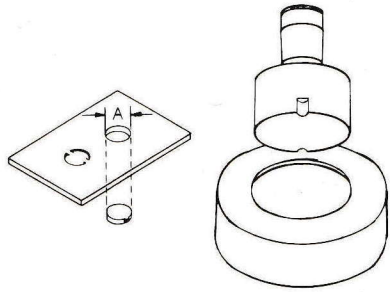

SPECIAL

The knockout punch and die set partially punches out the slug leaving it held by one or two tabs. The slug can be removed by tapping it with a screw driver. Punch and die designed for 18 gage thru 14 gage steel.

Pipe Size	1/8	1/4	3/8	1/2	3/4	1	1-1/4	1-1/2
"A" Dia.	7/16	9/16	11/16	7/8	1-1/8	1-11/32	1-11/16	1-15/16
91 Die Size	91 - 7/8 O.D.		91 - 1-3/16 O.D.		91 - 1-15/16 O.D.		91 - 2-7/16 O.D.	
Price Per Set	18.15		20.50		24.20		26.50	

LOUVRE

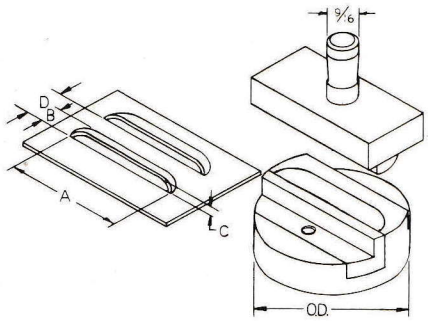

SPECIAL

Louvre sets are made in two popular sizes for use in the machines using 91 tooling. The distance between louvres is gaged by the die.

"A" Length	1-1/2	2
B	1/2	1/2
C	3/16	3/16
D	3/4	3/4
Thickness of Mat'l	.015 to .090	.015 to .090
91 Die Size	91 - 1-15/16 O.D.	91 - 2-7/16 O.D.
Price per Set	80.00	82.50

ANGLE IRON NOTCHING

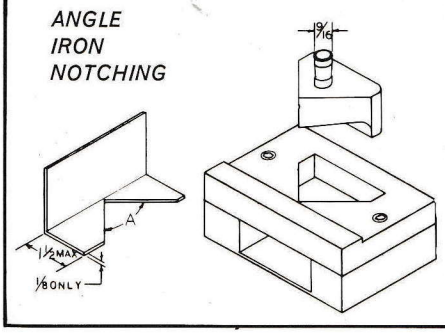

90° STANDARD

Angle iron notching die sets are used for notching before bending the angle iron. The fixed material gage is for 1/8" thick angles only.

"A" Angle	30° Spec.	45° Spec.	60° Spec.	90° Std.
Price of Punch	27.25	27.25	27.25	11.70
Price of Die	61.50	61.50	61.50	28.40
Price of Die Shoe	4.25	4.25	4.25	4.25
Price per Set	93.00	93.00	93.00	44.35

Prices may be higher west of the Rocky Mountains and outside of the United States because of duty and freight.

No. 91 TOOLING

PIPE NOTCHING

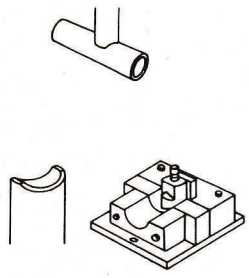

STANDARD

Pipe notching sets are used to notch pipe for making a right angle "T" joint in two pipes of equal size. One die holder assembly is required for all four sizes of pipe.

Nominal Pipe Size In.	3/4	1	1-1/4	1-1/2
Outside Diameter In.	1.050	1.315	1.660	1.900
Wall Thickness	.113	.133	.140	.145
Punch No. and Price	9153P - 46.40	9154P - 46.40	9155P - 46.40	9156P - 46.40
Die No. and Price	9153D - 58.50	9154D - 58.50	9155D - 58.50	9156D - 58.50
Die Holder Ass'y & Price	9152A - 51.20			

SLOTTING

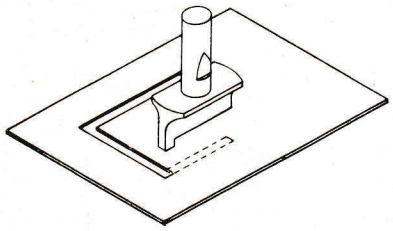

SPECIAL

Slotting punch and die sets are ideal for making large cutouts in sheets. A guide on the punch locates in the preceeding slot assuring a smooth cut. The guide is square for making good square corners. No starting hole required.

Width	1/8	3/16	1/4	5/16	3/8	7/16	1/2
Length	1-1/4	1-1/2	1-5/8	1-3/4	1-7/8	1-7/8	1-7/8
91 Die Size	91 - 1-15/16	91 - 2-7/16 O.D.					
Price per Set	34.85	36.50					

TRIMMING and PARTING

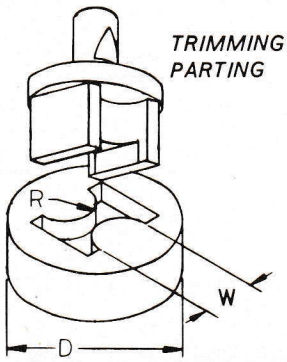

SPECIAL

Trimming and parting sets are used to cut off strip steel and at the same time trim both ends with a smooth radius.

"W"	1/4	3/8	1/2	5/8	3/4	1	1-1/2
"R"	5/32	7/32	9/32	11/32	13/32	17/32	25/32
Max. Thickness Mild Steel	3/16	1/4	1/4	3/16	3/16	1/8	1/8
91 Die Size	91 - 1-15/16 O.D.				91 - 2-7/16 O.D.		front del. w/die shoe
Price Per Set	137.00				156.00		228.00

UNION RECEPTACLE

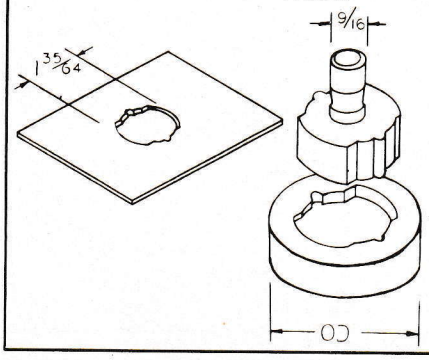

SPECIAL

Union receptacle is used primarily by the sign manufacturers. The special shaped hole allows the light receptacle to be inserted and locked in from the same side of the sheet. The spring center makes locating easier.

Union receptacle punch and die (2-7/16 O.D.) #91 style.....$52.95
With solid point

Union receptacle punch and die (2-7/16 O.D.) #91 style.....$60.20
With spring center

Prices may be higher west of the Rocky Mountains and outside of the United States because of duty and freight.

No. 91 TOOLING

TYPE "D"

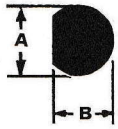

SPECIAL

Type "D" punch and die sets are not carried in stock due to the many combinations of sizes.
Specify type and thickness of material to be punched.

"A" Max. Diameter	5/8	7/8	1-1/2	2
"B" Flats	1/8 to 5/8	1/8 to 7/8	1/8 to 1-1/2	1/8 to 2
#91 Die Size	91 - 7/8 O.D.	91 - 1-3/16 O.D.	91 - 1-15/16 O.D.	91 - 2-7/16 O.D.
Price per set (P & D)	31.20	36.40	41.60	48.20

LARGE ROUNDS
2-1/16 Thru 5"

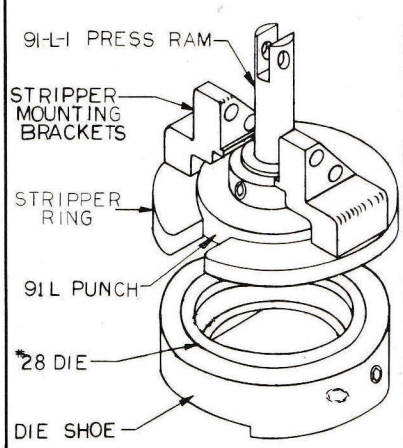

SPECIAL

This tooling will fit the #91, 92, 93 and 94 hand lever presses and 95, 96, 97 hydraulic presses. Shown are round punches and dies up to 5" diameter. The only change required to adapt this tooling to one of the above presses is the press ram, and this is easily done by removing the ram link pin and sliding one ram out and the 91L - 1 in. This rugged setup makes punching large holes in sheet metal an easy task.

Round Min. / Max.	Incre.	Punch Style	Die Style	Die Shoe	Stripper Ring	Stripper Mounting Brackets	Press Ram
2-1/16	1/16	91L	28 - 3-3/4 O.D.	91L - 3-3/4	91L - 3	91L - 3-4	91L - 1
3		$18.50	$8.35	$18.00	$15.50	$18.30 Set	$12.20
3-1/16	1/16	91L	28 - 4-3/4 O.D.	91L - 4-3/4	91L - 4		
4		$20.85	$13.50	$21.00	$19.30		
4-1/16	1/16	91L	Die and Die Shoe Assembly		91L - 5	91L - 5	
5		$34.00	$56.00		$26.60	$25.50	

UNISTRUT FRAME PUNCHING

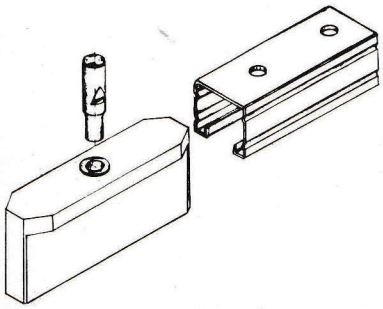

SPECIAL

The die shoe is designed to center the section and automatically center the holes being punched. Listed below is the maximum round hole which can be punched in each section along with the die shoe size, punch and die. Standard No. 91 narrow strippers are used for all sizes.

The Unistrut punching setup can be used on the 91 through 97 and 612-613 presses. Square, oval and rectangle punches and dies also available.

Unistrut size section number and size	Max. Dia. Hole Punched	Die Shoe Number	Die Number	Punch Number
P-1000 1-5/8 x 1-5/8* P-1100 1-5/8 x 1-5/8* P-2000 1-5/8 x 1-5/8* P-3000 1-5/8 x 1-5/8* P-5500 1-5/8 x 2-7/16*	11/16 Dia.	9182 $55.85	28 - 1-1/4 O.D. $1.00	#91**
P-4000 1-5/8 x 13/16	9/16 Dia.	9183 $55.85	#10***	
P-6000 13/16 x 13/16 P-7000 13/16 x 13/32	9/32 Dia.	9184 $55.85	9186 $4.90	
A-1000 1-1/4 x 1-1/4 A-4000 A-5000	1/2 Dia.	9185 $55.85	#10***	

* Can also be punched with 9183. ** See page 38 for punch price. *** See page 36 for die price.

Prices may be higher west of the Rocky Mountains and outside of the United States because of duty and freight.

No. 28 TOOLING

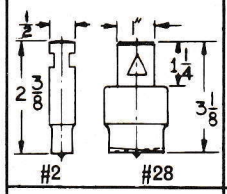

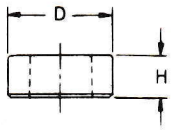

Punch No.	Die No.	D	H	Standard Stock Sizes — Fraction Round: Min. Max.	Incre.	Punch Price	Die Price	Specials — Decimal Round: Min. Max.	Incre.	Punch Price	Die Price	Standard Stock Sizes — Square: Min. Max.	Incre.	Punch Price	Die Price
2, or 8 Imp	28 - 1-1/4 O.D. or 20 F.T.	1-1/4	5/8	1/16 1/2	1/64	$ .90	$1.00	.062 .500	Any decimal size	$3.00	$3.75	1/8 5/16	1/16	$3.25	$8.45
28	28 - 1-1/4 O.D. or 20 F.T.	1-1/4	5/8	33/64 19/32	1/64	2.20	1.00	.501 .593		3.15	3.75	3/8 1/2	1/16	9.50	8.45
				39/64 47/64	1/64	2.85	1.00	.594 .734		3.60	3.75				
				3/4 13/16	1/64	2.85	1.65	.735 .812		3.60	3.75				
	28 - 2-1/8 O.D. or 40 F.T.	2-1/8	7/8	53/64 1	1/64	2.85	3.65	.813 1.000		3.60	4.05	9/16 11/16	1/16	9.50	12.10
				1-1/64 1-7/32	1/64	3.30	3.65	1.001 1.218		5.35	4.05	3/4 1-1/16	1/16	9.90	
				1-15/64 1-29/64	1/64	4.85	3.65	1.219 1.453		6.50	4.05				
	28 - 2-3/4 O.D.	2-3/4	1-5/32	1-15/32 1-23/32	1/64	5.90	3.95	1.454 1.718		7.15	4.35	1-1/8 1-3/8	1/16	11.75	15.30
				1-47/64 2	1/64	6.50	3.95	1.719 2.000		7.70	4.35				
	28 - 3-3/4 O.D.	3-3/4	1-5/32	2-1/16 3	1/16	7.00	8.35	2.001 3.000		9.15	9.15	1-7/16 1-3/4	1/16	14.50	20.45
												1-13/16 2	1/16	18.00	
	28 - 4-3/4 O.D.	4-3/4	1-5/32	3-1/16 3-1/2	1/16	8.35	13.50	3.001 3.500		13.20	14.85	2-1/2 only		26.60	40.00
				3-9/16 4	1/16	12.00	13.50	3.501 4.000		18.20	14.85				
	Die and die shoe assembly — be sure to give press number to be used with											3" only		33.25	66.00
												4" only		53.25	112.00

Nos. 1 thru 60 and "A" thru "Z" DRILL SIZES — PUNCHES (#2 STYLE) $1.00, DIES (28 - 1-1/4 STYLE) $1.10.

Extra for spring center point — $7.25.
Extra for 28 - 1-1/4 OD and 28 - 2-1/8 OD die 1/8 higher than standard with shear — $8.50.
Extra for 28 - 2-3/4 OD through 4-3/4 OD die 1/8 higher than standard with shear — $12.50.
Extra for 28 punch without center point and without shear 5/8" to 1" dia. — $7.50, 1" to 1-29/64" dia. — $9.25, and 1-15/32" to 4" dia. — $11.25. Extra for punch with 1-9/16 shank 5-1/2 O.A. — $18.00.
Extra for punch with 2" shank 5-1/2" O.A. — $24.50.
1/16 thru 1/2 dia. with 1" shank #28 style — $4.80. Extra

ORDERING INFORMATION

(A) Be sure to specify the thickness and type of material to be punched so proper punch and die clearance can be allowed. Recommended clearance:

38 Ga. thru 25 Ga. mild steel — use std. fraction punch and decimal (close fit) die.

24 Ga. thru 12 Ga. mild steel — use std. fraction punch and die (.002 - .004 O.A. std.)

10 Ga. thru 3/16 mild steel — use std. fraction punch and 1/64 larger die. 7/32 thru 3/8 mild steel — use std. punch and 1/32 larger die.

(B) When punching stainless or spring steel consistently, high-speed steel punches and dies should be used to receive good punch and die life. Prices on application.

Prices may be higher west of the Rocky Mountains and outside of the United States because of duty and freight.

No. 28 TOOLING

OVAL

"X" STANDARD ☐ SPECIAL

[X] Box with "X" indicates a size carried in stock.
at price shown. For nonstock sets add 10% to price shown. Where "B" is from 1/32 to 3/32 double price shown.
All punches over 1/2" long are #28 1" shank 3-1/8 O.A.
Punches for ovals up to 1/2" long are 1/2 dia. x 2-3/8 LG. #2.

Die Size		#28 - 1-1/4 O.D. (or #20 F.T.)					#28 - 2-1/8 O.D. (or #40 F.T.)			#28 - 2-3/4 O.D.		
Price		Punch $6.20 Die $10.50					Punch $11.55 Die $13.50			Punch $13.50 Die $17.00		
Length "A"		1/4	3/8	1/2	5/8	3/4	7/8	1	1-1/4	1-1/2	1-3/4	2
"B" Width	1/8			X				X		X		X
	3/16		X	X				X				
	7/32											
	1/4			X				X		X		X
	9/32											
	5/16			X				X				
	3/8			X		X		X		X		X
	1/2							X		X		X
	5/8							X		X		X
	3/4							X		X		X
	7/8							X		X		X
	1									X		X

RECTANGLE

"X" STANDARD ☐ SPECIAL

[X] Box with "X" indicates a size carried in stock at price shown. For nonstock sets add 10% to price shown. Where "B" is from 1/32 to 3/32 double price shown. All punches are #28 1" shank 3-1/8 OA.

Die Size		#28 - 1-1/4 O.D. (or #20 F.T.)					#28 - 2-1/8 O.D. (or #40 F.T.)			#28 - 2-3/4 O.D.		#28 -3-3/4 OD
Price		Punch $9.50 Die $8.50					Punch $9.90 Die $12.10			Punch $11.60 Die $15.75		Punch $14.50 Die $20.50
Length "A"		1/4	3/8	1/2	5/8	3/4	7/8	1	1-1/4	1-1/2	2	2-1/2
"B" Width	1/8	*	*	X				X		X	X	
	3/16	*	*	X				X				
	1/4		*	X				X		X	X	
	5/16		*									
	3/8			X				X		X	X	
	7/16											
	1/2							X		X	X	
	5/8							X		X	X	
	3/4							X		X	X	
	7/8							X		X	X	
	1									X	X	
	1-1/8											

* Sizes having 1/2 x 2-3/8 #2 punch style.

Prices may be higher west of the Rocky Mountains and outside of the United States because of duty and freight.

No. 28 TOOLING

TYPE "P"

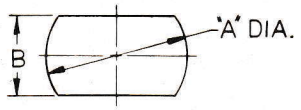

SPECIAL

Type "P" punch and die sets are not carried in stock due to the many combinations of sizes. Specify type and thickness of material to be punched.

"A" Max. Diameter	1/2	13/16	1-7/16	2
"B" Flats	1/8 to 1/2	1/8 to 13/16	1/8 to 1-7/16	1/8 to 2
#28 Die Size	28 - 1-1/4 O.D. or #20 Ft	20 - 1-1/4 O.D. or #20 Ft	28 - 2-1/8 O.D. or #40 Ft	28 - 2-3/4 O.D.
Punch Style	2	28	28	28
Price per Set	41.45	46.45	57.50	74.50

HEXAGON

SPECIAL

Hexagon punch and die sets are not carried in stock. "A" is made with a +.002 —.000 tolerance with standard clearance .004 — .006. Specify type and thickness of material to be punched.

"A" Max. Hex.	13/32	11/16	1-3/16	1-11/16
#28 Die Size	28 - 1-1/4 O.D.	28 - 1-1/4 O.D.	28 - 2-1/8 O.D.	28 - 2-3/4 O.D.
Punch Style	2	28	28	28
Price per Set	23.40	28.00	35.70	46.80

CORNER ROUNDING

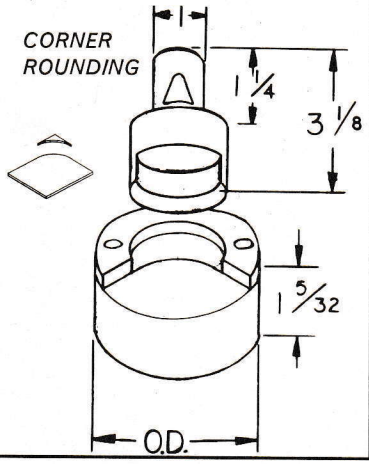

SPECIAL

Corner rounding punch and die sets round the corners of sheet metal parts fast and accurately. The work is located by two gage surfaces making it easy to produce good clean corners. These sets are carried in stock.
1/4" sizes and larger are 28 style 1" shank by 3-1/8 O.A. 1/16 thru 3/16 punches are #2 style 1/2 x 2-3/8 LG.

Size of Radius	1/16	1/8	3/16	1/4	3/8	1/2	5/8	3/4	1	1-1/2	2
#28 Die Size	28 - 1-1/4 O.D.			28 - 2-1/8 O.D.			28 - 2-3/4 O.D.			28 3-3/4 O.D.	28 4-3/4 O.D.
Price Per Set	57.50			60.00			93.50			110.00	132.00

COMBINATION NOTCH & COPE

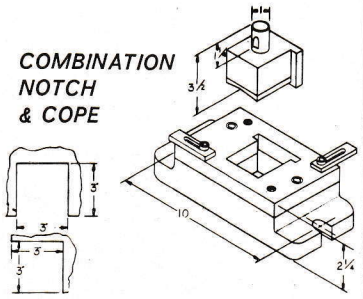

SPECIAL

The combination notch and cope die set is a vertical tool in sheet metal shops and sign shops. Adjustable gages facilitate fast work location and they can be set for a number of different types of operations. These sets are carried in stock.

#28 Combination Notch & Cope Die Set.....$172.00

Prices may be higher west of the Rocky Mountains and outside of the United States because of duty and freight.

No. 28 TOOLING

KEYHOLE

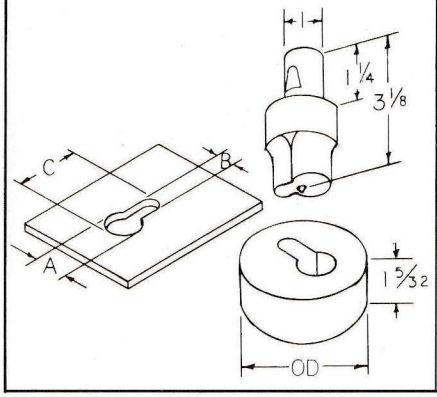

SPECIAL

Keyholes punched in sheet metal parts allow assembly without removing the screw. The sizes shown will take standard pan head screws, round head screws and sheet metal screws. All punches are 28 style 1″ shank 3-1/8 O.A.

Size of Screw	#3 - #5	#6 - #10	#12 - 1/4	5/16	3/8	7/16	1/2	5/8
"A"	9/32	13/32	17/32	21/32	25/32	13/16	7/8	1-1/16
"B"	9/64	13/64	9/32	11/32	13/32	15/32	17/32	21/32
"C"	7/16	5/8	7/8	1	1-1/4	1-3/8	1-1/2	1-5/8
28 Die Size	28 - 1-1/4 O.D.		28 - 2-1/8 O.D.		28 - 2-3/4 O.D.			
Price Per Set	53.00		56.00		66.00			

KNOCKOUT, ELECTRICAL

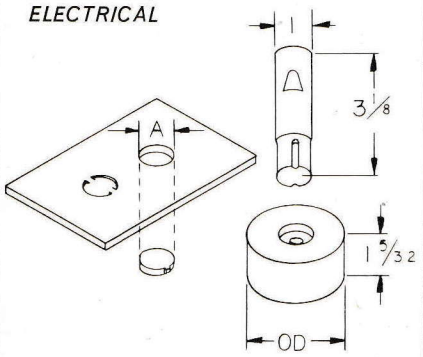

SPECIAL

The Knockout Punch & Die Set partially punches out the slug leaving it held by one or two tabs. The slug can be removed by tapping it with a screw driver. Punch and die designed for 18 thru 14 ga. steel.
All punches are 28 style 1″ shank 3-1/8 O.A.

Pipe Size	1/8	1/4	3/8	1/2	3/4	1	1-1/4	1-1/2
"A" Dia.	7/16	9/16	11/16	7/8	1-1/8	1-11/32	1-11/16	1-15/16
28 Die Size	28 - 1-1/4 O.D.			28 - 2-1/8 O.D.			28 - 2-3/4 O.D.	
Price Per Set	15.00			23.60			30.20	

LOUVRE

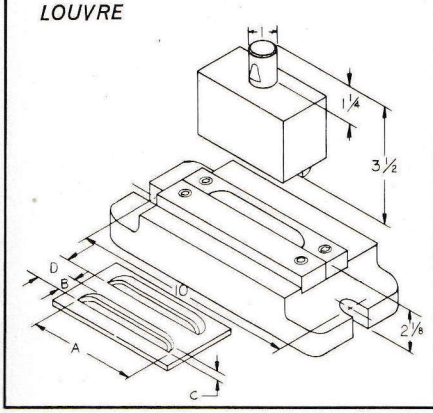

STANDARD

WAWhitney Louvre Die Sets offer several features:
a) they are made from finest quality high-chrome high carbon tool steel, b) one die shoe ($22.50) and one front cutting die insert ($18.00) can be used on all five louvre sizes,
c) all four edges of front cutting die insert can be used,
d) the distance between louvres "D" is gaged by the die.

"A"	2″	3″	4″	5″	6″
"B"	1/2	5/8	3/4	3/4	3/4
"C"	3/16	1/4	1/4	5/16	5/16
"D"	3/4	15/16	1-1/8	1-1/8	1-1/8
Price Per Set	104.50	121.00	145.20	179.30	220.00

TRIMMING & PARTING

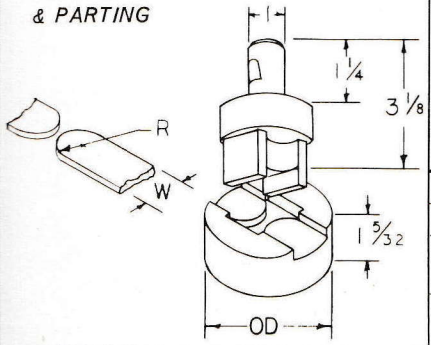

SPECIAL

Trimming and Parting Sets are used to cut off strip steel and at the same time trim both ends with a smooth radius. Guides on the punch enter die before work is done to give excellent tool life. Not carried in stock.
All punches are 28 style, 1″ shank, 3-1/8 O.A.

"W"	1/4	3/8	1/2	5/8	3/4	1
"R"	5/32	7/32	9/32	11/32	13/32	17/32
#28 Die Size	28 - 2-1/8 O.D.				28 - 2-3/4 O.D.	
Price Per Set	121.00				145.00	

Prices may be higher west of the Rocky Mountains and outside of the United States because of duty and freight.

No. 28 TOOLING

DIE ADAPTERS AND DIE SHOES FOR No. 28 DIES (READ DOWN)

#28 DIE SIZE	20 F.T. or 28 - 1-1/4 O.D.	40 F.T. or 28 - 2-1/8 O.D.	28 - 2-3/4 O.D.	28 - 3-3/4 O.D.	28 - 4-3/4 O.D.
#28 DIE ADAPTER	$4.40 #28 - 01 28 - 1-1/4 x 2-3/4	$4.40 #28 - 02 28 - 2-1/8 x 2-3/4	NONE REQ'D	NONE REQ'D	NONE REQ'D
#28 DIE SHOES "F" SERIES 1½" HIGH	$14.60 #28 F - 2-3/4			$21.75 #28 F - 3-3/4	$30.00 #28 F - 4-3/4
#28 DIE SHOES "P" SERIES 2" HIGH	$16.60 #28 P - 2-3/4			$23.00 #28 P - 3-3/4	$29.90 #28 P - 4-3/4
#28 DIE SHOES "S" SERIES 2½" HIGH	$33.25 #28 S - 2-3/4			$40.15 #28 S - 3-3/4	$46.75 #28 S - 4-3/4

PUNCH ADAPTERS FOR STD. PUNCHES (READ DOWN)

STD. PUNCH	#2 (8 IMP.)	#10	#20	#40	#28	#91
PUNCH ADAPTERS "F" & 612 SERIES 1" DIA. x 1¼" SHANK	#28 F -2 $7.15; 612 - 117 $8.60	#28 F - 10 $12.50			#28 F - 28 $7.15	612 - 110 $8.60
PUNCH ADAPTERS "P" SERIES 1 9/16" DIA. x 2" SHANK	#28 P - 2 $7.15		P - 20 $14.60	P - 40 $14.60	#28 P - 28 $7.45	
PUNCH ADAPTERS "S" SERIES (P-331) 2" DIA. x 2½" SHANK	S - 2 $15.50				S - 28 $15.50	

Prices may be higher west of the Rocky Mountains and outside of the United States because of duty and freight.

THE ORIGINAL

Whitney • Estwing Patent Hammers

CURVED CLAW

Weight head	12 oz	16 oz	20 oz
Wt per doz	14 lb	19 lb	22 lb
Catalog No.	B12C	B16C	B20C

28-OZ HEAVY-DUTY CURVED CLAW

Weight head	28 oz
Wt per doz	27 lb
Catalog No.	B28C
Available with scored face	B28CX

STRAIGHT CLAW

Weight head	12 oz	16 oz	20 oz
Wt per doz	14 lb	19 lb	22 lb
Catalog No.	B12S	B16S	B20S

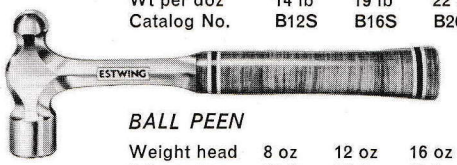

BALL PEEN

Weight head	8 oz	12 oz	16 oz	24 oz	32 oz
Wt per doz	12 lb	14 lb	19 lb	25 lb	30 lb
Catalog No.	BP8	BP12	BP16	BP24	BP32

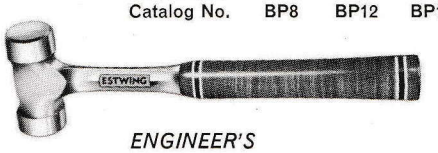

ENGINEER'S

Weight head	2-1/2 lb
Wt per doz	34 lb
Catalog No.	B40L

28 OZ HEAVY-DUTY STRAIGHT CLAW

Weight head	28 oz
Wt per doz	27 lb
Catalog No.	B28S
Available with scored face	B28SX

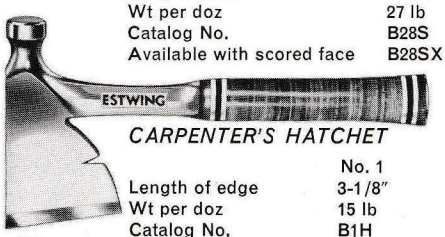

CARPENTER'S HATCHET

	No. 1	No. 2
Length of edge	3-1/8"	3-5/8"
Wt per doz	15 lb	25 lb
Catalog No.	B1H	B2H

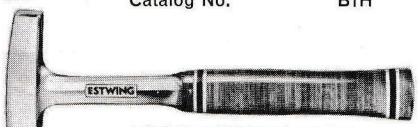

PROSPECTOR'S PICK

Sheath Extra

Weight head	22 oz
Wt per doz	25 lb
Catalog No.	B30

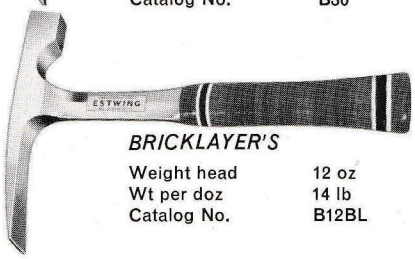

BRICKLAYER'S

Weight head	12 oz	20 oz
Wt per doz	14 lb	22 lb
Catalog No.	B12BL	B20BL

TINNER'S SETTING

Weight head	18 oz
Wt per doz	21 lb
Catalog No.	B18

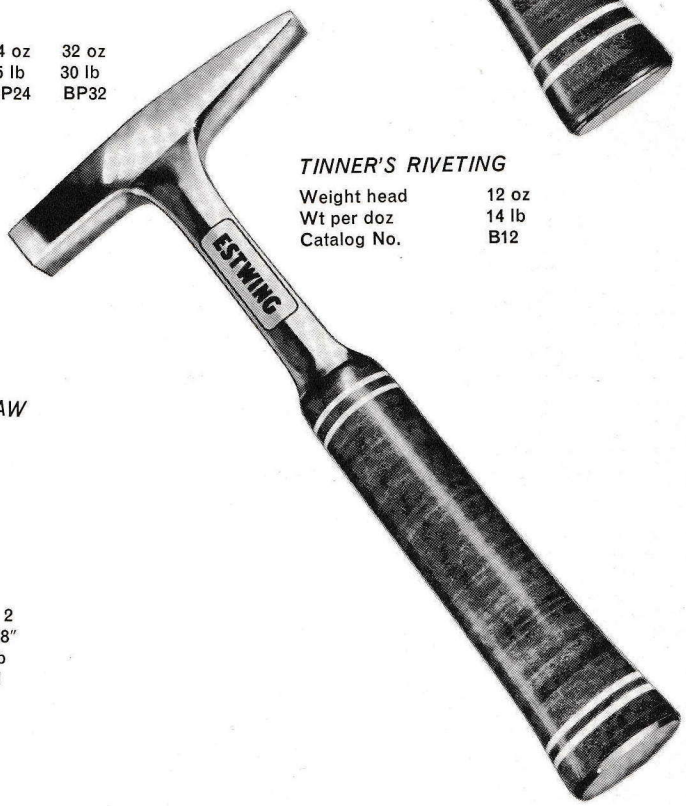

TINNER'S RIVETING

Weight head	12 oz
Wt per doz	14 lb
Catalog No.	B12

Engineer double-faced hammer packed two per shelf box. All others packed four per shelf box.

These unbreakable hand tools have a blue painted finish. Polished finish tools, 50c more than painted finish tools. Leather grip absorbs the shock and will last the life of the tool and is not affected by oil, sweat, and grease.

Perfect balance of tools not affected by usage. Built right to withstand everyday use on the job. Heat-treated all over.

Section 5

THE ORIGINAL

W.A. Whitney • Parts for Hand Lever Punches

PARTS NO. 1 PUNCH

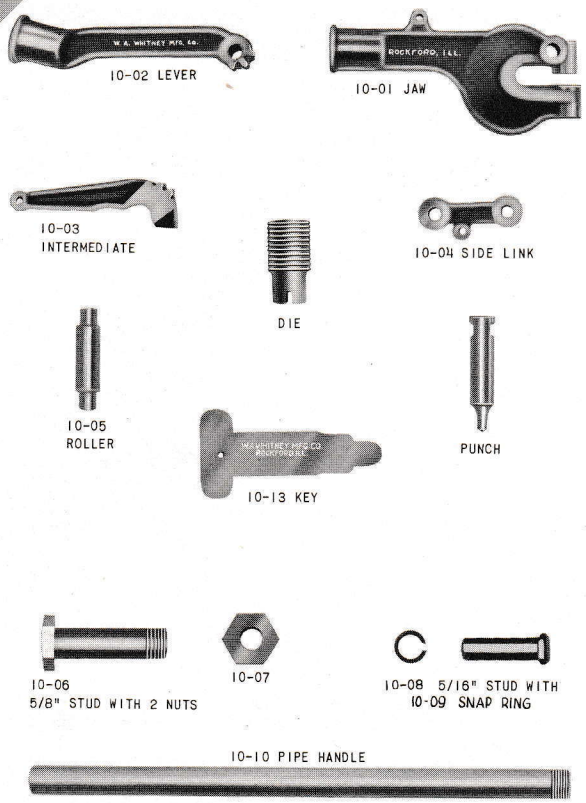

PARTS NO. 2 PUNCH

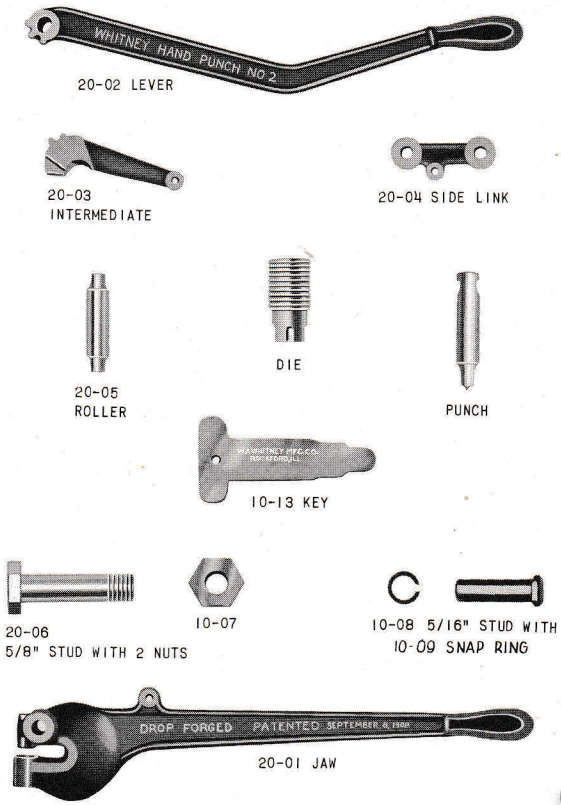

PARTS NO. 2 CHANNEL IRON PUNCH

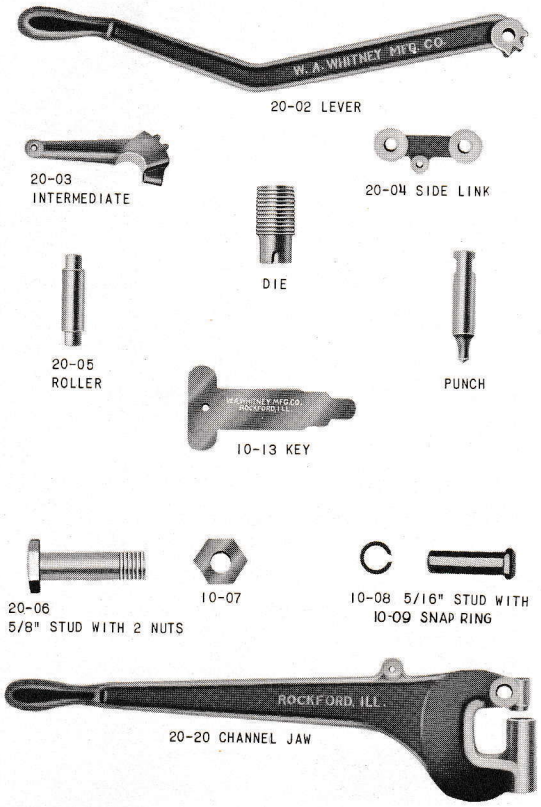

PARTS NO. 4B PUNCH

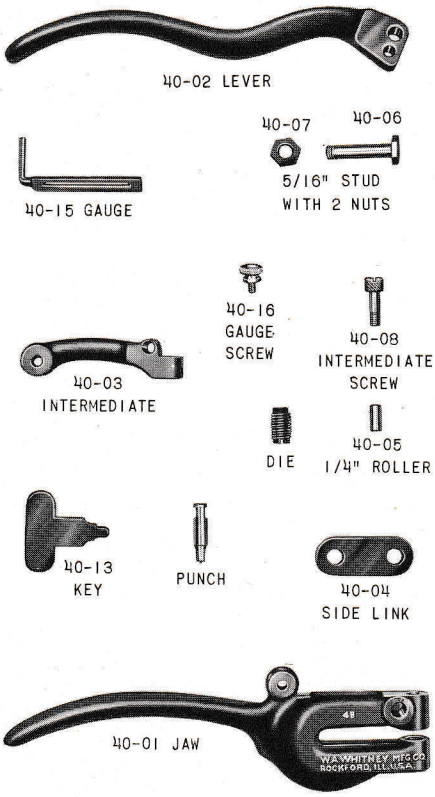

PARTS NO. 6 PUNCH

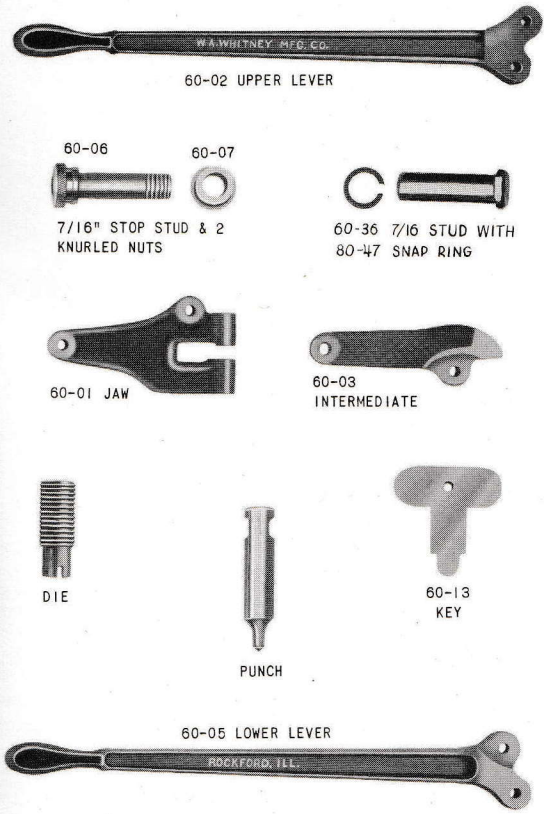

PARTS NO. 8B PUNCH

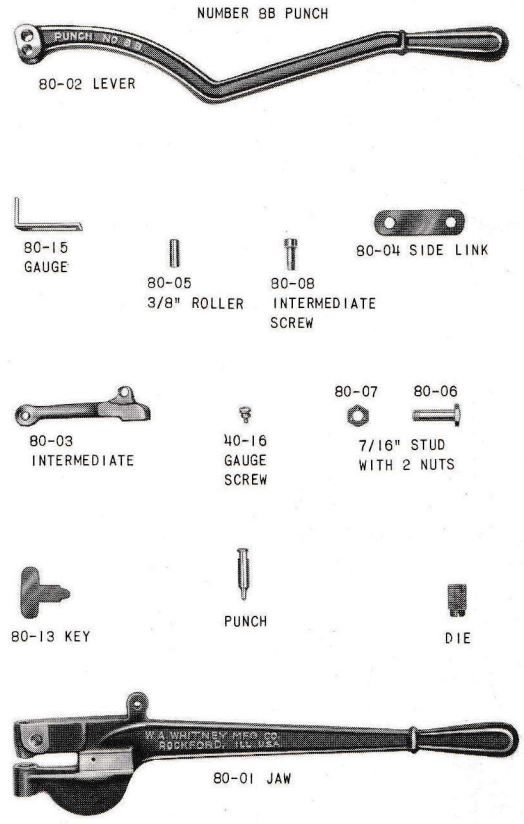

PARTS NO. 8C PUNCH

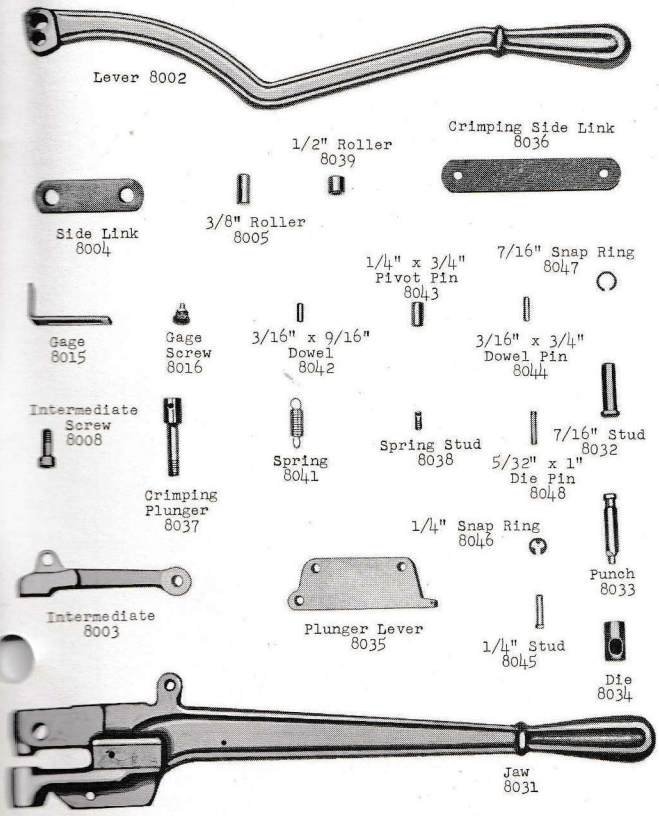

PARTS NO. 91 BENCH PUNCH

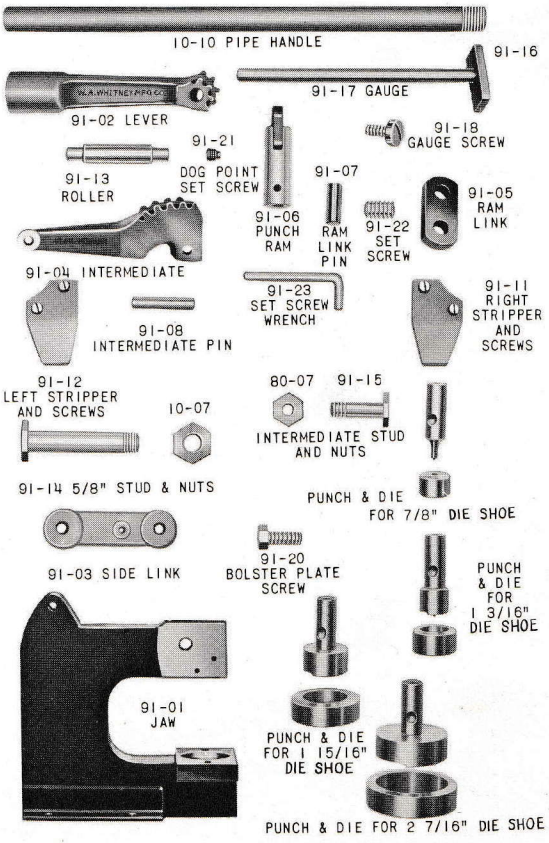

DECIMAL EQUIVALENTS

Fraction	Decimal	Drill Size	Sheet Metal Gage		Fraction	Decimal	Drill Size	Sheet Metal Gage		Fraction	Decimal	Drill Size	Sheet Metal Gage
	.006		38			.113	33			9/32	.28125		
	.0064		37			.116	32				.290	L	
	.0067		36			.1196		11			.295	M	
	.0075		35			.120	31			19/64	.29688		
	.0082		34		1/8	.125					.302	N	
	.0090		33			.1285	30			5/16	.3125		
	.0097		32			.1345		10			.316	O	
	.0105		31			.136	29				.323	P	
	.012		30			.1405	28			21/64	.32813		
	.0135		29		9/64	.14063					.332	Q	
	.0149		28			.144	27				.339	R	
1/64	.01563					.147	26			11/32	.34375		
	.0164		27			.1495	25	9			.348	S	
	.0179		26			.152	24				.358	T	
	.0209		25			.154	23			23/64	.35938		
	.0239		24		5/32	.15625					.368	U	
	.0269		23			.157	22			3/8	.375		
	.0299		22			.159	21				.377	V	
1/32	.03125					.161	20				.386	W	
	.0329		21			.1644		8		25/64	.39063		
	.0359		20			.166	19				.397	X	
	.040	60				.1695	18				.404	Y	
	.041	59			11/64	.17188				13/32	.40625		
	.0418		19			.173	17				.413	Z	
	.042	58				.177	16			27/64	.42188		
	.043	57				.1793		7		7/16	.4375		
	.0465	56				.180	15			29/64	.45313		
3/64	.04688					.182	14			15/32	.46875		
	.0478		18			.185	13			31/64	.48438		
	.052	55			3/16	.1875				1/2	.500		
	.0538		17			.189	12			33/64	.51563		
	.055	54				.191	11			17/32	.53125		
	.0595	53				.1935	10			35/64	.54688		
	.0598		16			.1943		6		9/16	.5625		
1/16	.0625					.196	9			37/64	.57813		
	.0635	52				.199	8			19/32	.59375		
	.067	51				.201	7			39/64	.60938		
	.0673		15		13/64	.20313				5/8	.625		
	.070	50				.204	6			41/64	.64063		
	.073	49				.2055	5			21/32	.65625		
	.0747		14			.2092		5		43/64	.67188		
	.076	48				.209	4			11/16	.6875		
5/64	.07813					.213	3			45/64	.70313		
	.0785	47			7/32	.21875				23/32	.71875		
	.081	46				.221	2			47/64	.73438		
	.082	45				.2242		4		3/4	.750		
	.086	44				.228	1			49/64	.76563		
	.089	43				.234	A			25/32	.78125		
	.0897		13		15/64	.23438				51/64	.79688		
	.0935	42				.238	B			13/16	.8125		
3/32	.09375					.2391		3		53/64	.82813		
	.096	41				.242	C			27/32	.84375		
	.098	40				.246	D			55/64	.85938		
	.0995	39			1/4	.250	E			7/8	.875		
	.1015	38				.257	F			57/64	.890625		
	.104	37				.261	G			29/32	.90625		
	.1046		12		17/64	.26563				59/64	.921875		
	.1065	36				.266	H			15/16	.9375		
7/64	.10938					.272	I			61/64	.953125		
	.110	35				.277	J			31/32	.96875		
	.111	34				.281	K			63/64	.984375		

INSIDE Back cover

TONS PRESSURE REQUIRED TO PUNCH MILD STEEL PLATE

Metal Gage	Thickness in Inches	Hole Diameter in Inches														
		1/8	3/16	1/4	5/16	3/8	7/16	1/2	9/16	5/8	11/16	3/4	13/16	7/8	15/16	1
20	0.036	0.35	0.53	0.71	0.88	1.1	1.2	1.4	1.6	1.8	1.9	2.1	2.3	2.5	2.7	2.8
18	0.048	0.47	0.71	0.94	1.2	1.4	1.7	1.9	2.1	2.4	2.6	2.8	3.1	3.3	3.5	3.8
1/16 or 16	0.060	0.59	0.89	1.2	1.5	1.8	2.1	2.4	2.7	2.9	3.2	3.5	3.8	4.1	4.4	4.7
14	0.075	0.74	1.1	1.5	1.9	2.2	2.6	2.9	3.3	3.7	4.1	4.4	4.8	5.2	5.5	5.9
12	0.105	1.0	1.6	2.1	2.6	3.1	3.6	4.1	4.7	5.2	5.7	6.2	6.7	7.2	7.7	8.3
1/8 or 11	0.120	1.2	1.8	2.4	3.0	3.5	4.1	4.7	5.3	5.9	6.5	7.1	7.7	8.3	8.8	9.4
10	0.135		2.0	2.7	3.3	4.0	4.6	5.3	6.0	6.6	7.3	8.0	8.6	9.3	10.0	10.6
3/16	0.187		2.8	3.7	4.6	5.5	6.5	7.4	8.3	9.2	10.2	11.1	12.0	12.9	13.8	14.8
1/4	0.250			4.9	6.2	7.4	8.6	9.8	11.0	12.3	13.5	14.8	16.0	17.2	18.5	19.7
5/16	.312				7.8	9.2	10.8	12.3	13.8	15.4	16.9	18.4	20.	21.5	23.0	24.6
3/8	0.375					11.1	13.0	14.8	16.6	18.5	20.3	22.1	24.0	25.8	27.7	29.5
1/2	0.500						17.2	19.7	22.1	24.6	27.1	29.5	32.0	34.4	36.9	39.4
5/8	0.625									30.8	33.8	36.9	40.0	43.0	46.1	49.2
3/4	0.750										40.6	44.3	48.0	51.9	55.4	59.0
7/8	.875											51.6	56	60.2	64.6	69.0
1	1.00												64	68.8	73.8	78.8

Above chart based upon shearing strength of 25 tons per square inch for mild steel.
Other materials have different shearing strengths as shown below. Also shown is the multiplier to use for calculating the required pressure for punching using the above chart. For example: a 1/2 diameter hole in 1/2" thick stainless steel would require 19.7 x 1.4 = 27.6 tons.

	Tons per sq. in.	Chart Multiplier
Aluminum (half hard sheet)	9.5	.38
Brass (half hard sheet)	17.5	.7
Copper (rolled)	14.	.56
Steel, mild	25.	1.
Steel, 50 carbon	35.	1.4
Steel, cold drawn	30.	1.2
Steel, stainless (18-8)	35.	1.4

The required tonnage for straight cuts or odd shaped holes can be calculated by multiplying the length of cut edge in inches times the material thickness times the shearing strength of the material in tons. This gives required tonnage using a flat punch. Shear milled on the punch or die equal to the material thickness will reduce the required tonnage about 1/3. (#28 and 91 style punches 5/8 and above have 1/8 shear).

Back cover

Know-how... Service... Quality

Tools and tooling by WAWhitney are backed by know-how, service, and quality of materials and workmanship that make them the best buy for every metal-working requirement within their broad range of application.

Complete factory service backs every WAWhitney distributor.

WAWhitney Mfg. Co. ... Since 1907

636 Race Street • Rockford, Ill.

Form No. GL- 5M-562

Printed in U.S.A.